INSTALLATION INSTRUCTIONS

BLACK MODULAR GRILLE GUARD FOR 03-20 CHEVY EXPRESS PASSENGER (CHEVY EXPRESS VAN)

PART #17GV02MA

Before Installation

- Please read the instruction completely for easy installation, which will also help you to avoid scratches or other potential damages to your appealing car.
- The figures here are for reference only and may have differences with the actual product you received, however they share the same assembly way.

Care and Cleaning

- Mild soap may be used also to clean the Product.
- Please periodically check and retighten all the hardware and clean the investment for a refresh look.

Parts List

1	Front Guard	2	Flat Washer D6（6x18x1.6mm）
1	Left Brush Guard	8	Hex Button Head Bolt M8_25
1	Right Brush Guard	20	Flat Washer D8（8x24x2mm）
1	Driver/Left Frame Bracket	10	Hex Lock Nut M8
1	Passenger/Right Frame Bracket	2	Hex Button Head Bolt M8_30
1	Driver/Left Top Support Bracket	4	Hex Bolt M10_35
1	Passenger/Right Top Support Bracket	8	Spring Washer D10
2	U Bolt M10	12	Flat Washer D10（10x30x2.5mm）
4	PVC Plastic Block Φ10	8	Hex Nut M10
2	Hex Bolt M6_20	1	Allen Wrench S=5

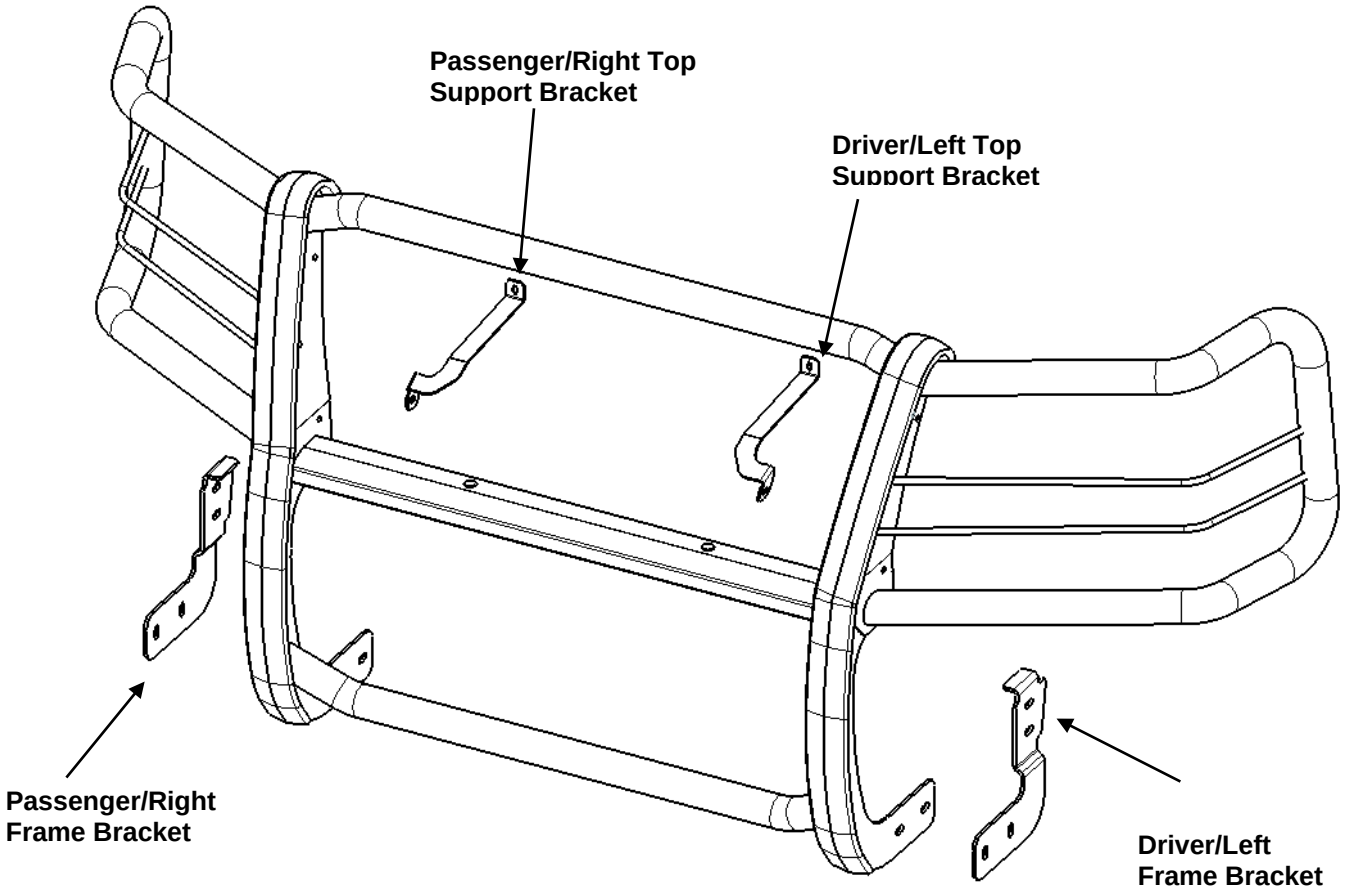

WINGS PARTS LIST:

①	Type 1 hex lock nut M8 with non-metallic insert	8
②	Flat Washer D8（8x24x2mm）	16
③	Hex socket button head bolt M8_25	8
④	Allen Wrench S=5	1

WINGS INSTALLATION PICTURE (LEFT-RIGHT CONSISTENCY):

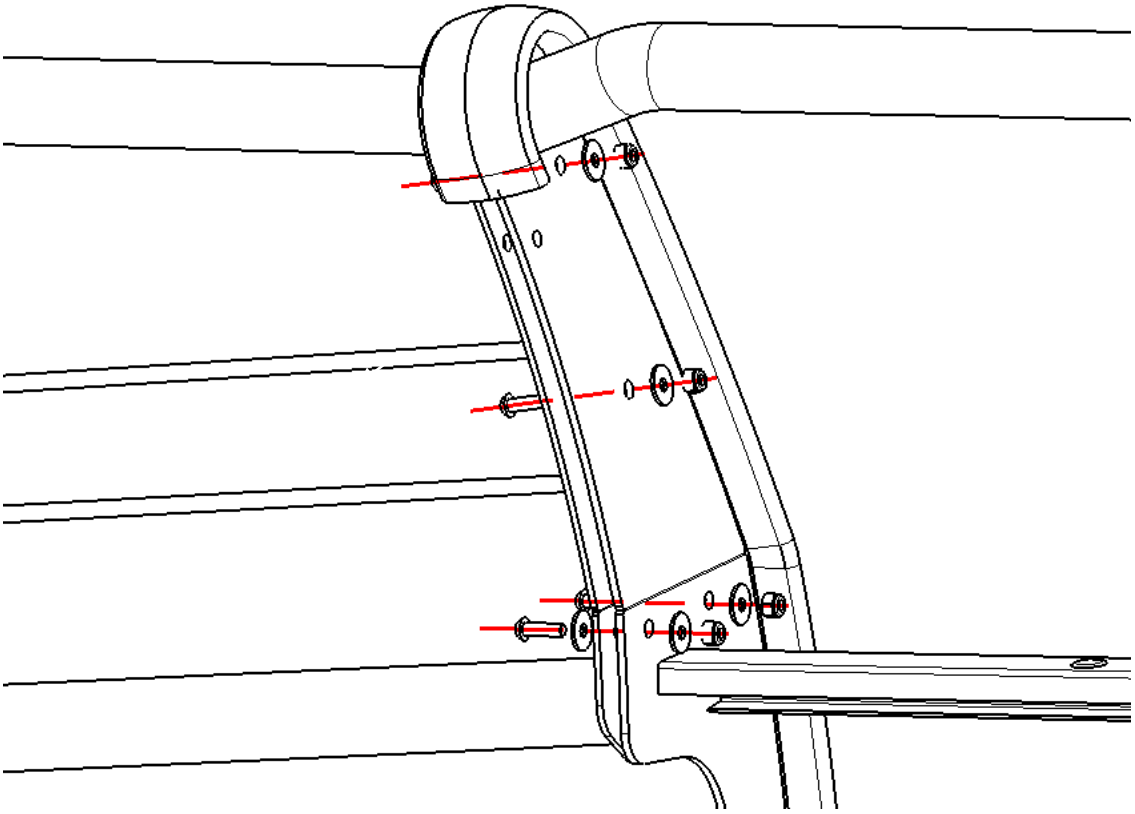

PROCEDURE:

REMOVE CONTENTS FROM BOX. VERIFY ALL PARTS ARE PRESENT. READ THE INSTRUCTIONS CAREFULLY. ASSISTANCE IS RECOMMENDED.

1. Start installation under the front bumper. Carefully remove he skirt strip of front bumper. **(Figure 1)**.
2. Find the mounting holes under the car girder **(Figure2)**, then place (1) U bolt M10 and (2) PVC Plastic Blocks Φ10 on the mounting position for subsequent installation of brackets and standard parts, and for preventing U-bolts from falling into the girder.
3. Next, Use (2) Flat Washers D10 (10x30x2.5mm), (2) Spring Washers D10, (2) Hex Nuts M10 to install Driver/Left Frame Bracket **(Figure3)**, as **Figure4** shows.
4. Repeat **Steps 2—3** to install the Passenger/Right Frame bracket.
5. Open the hood and remove the cover on top of the radiator, **(Figure 5)**, Remove the factory hex bolts from the passenger/left/right side of the steel radiator core support, **(Figure 6).** Install the Driver/Left Top Support Bracket with (1) Hex Bolt M6_20, (1) Flat Washer D6 (6x18x1.6mm) **(Figure 7).** Do not fully tighten hardware at this time.
6. Repeat **Steps 5** to install the Passenger/Right Top Support Bracket
7. With assistance, attach the Grille Guard to the inside of the Frame Brackets with the included (4) 10mm x 35mm Hex Bolts, (8) 10mm Flat Washers, (4) 10mm Spring Washers and (4) 10mm Hex Nuts, **(Figures 8 & 9)**. Do not fully tighten hardware at this time.
8. Line up the Top Support Brackets with the threaded inserts in the top tube on the Grille Guard. Attach the Support Brackets to the Grille Guard with (2) 8mm Button Head Bolts, (2) 8mm Lock Washers and (2) 8mm Flat Washers, **(Figure 10)**. Do not fully tighten hardware at this time.
9. Adjust the grille guard to the appropriate position, lock all the brackets and the standard parts, reinstall the hood plastic and close the hood. Complete installation.

Driver/Left Side Installation Pictured

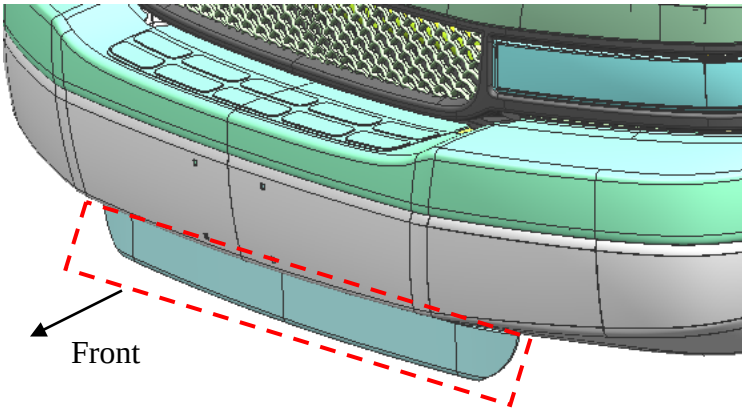

(Fig 1) Remove skirt strip of front bumper

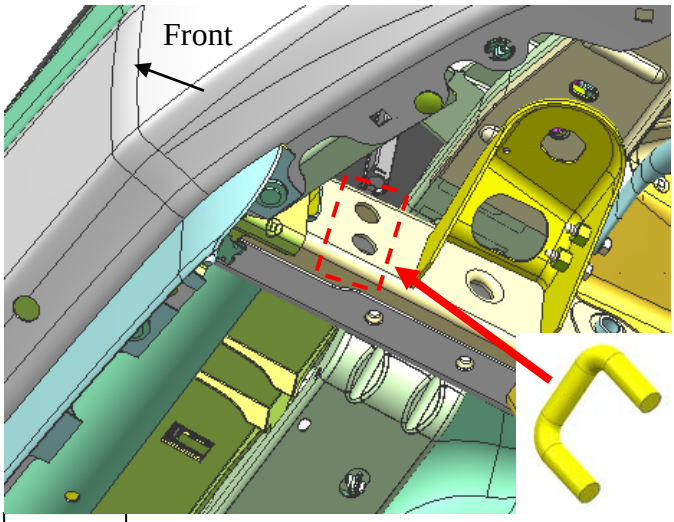

(Fig 2)

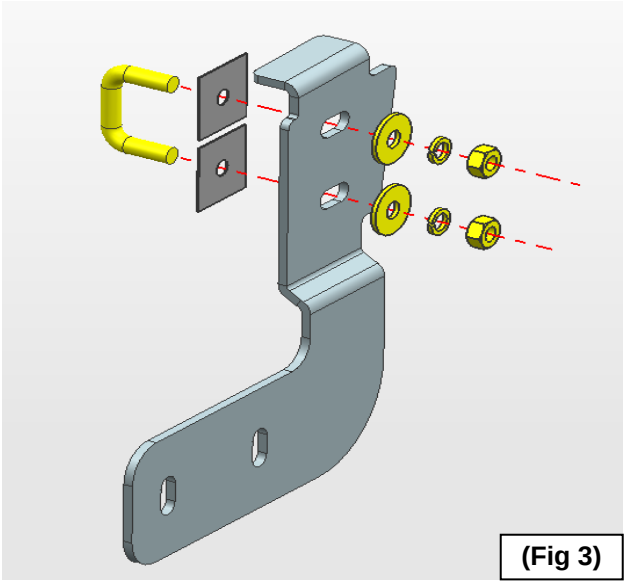

(Fig 3)

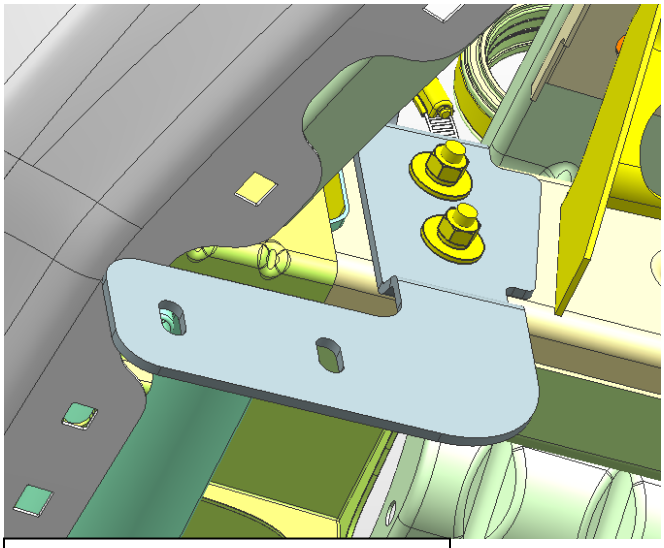

(Fig 4) Driver/Left Bracket Picture

Passenger/left Side Installation Pictured

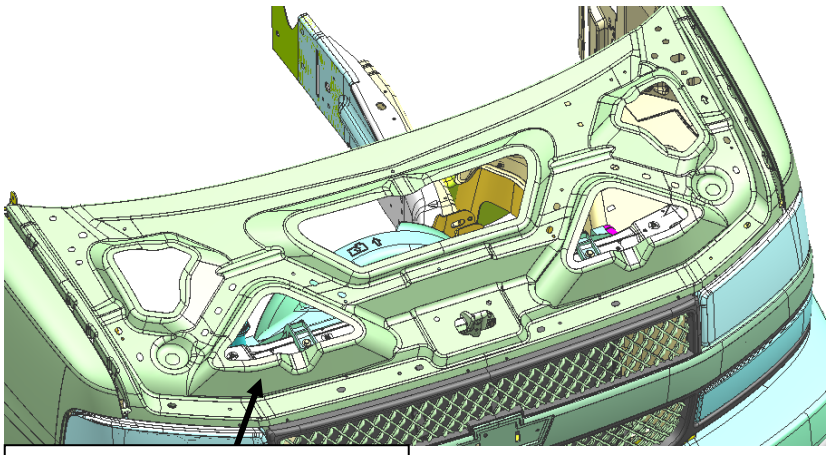

(Fig 5) Remove plastic cover

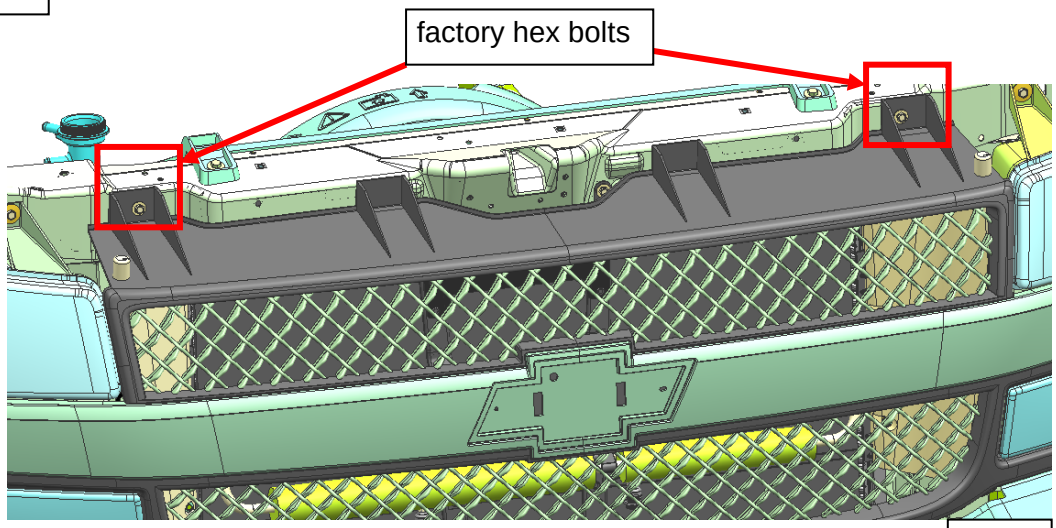

(Fig 6)

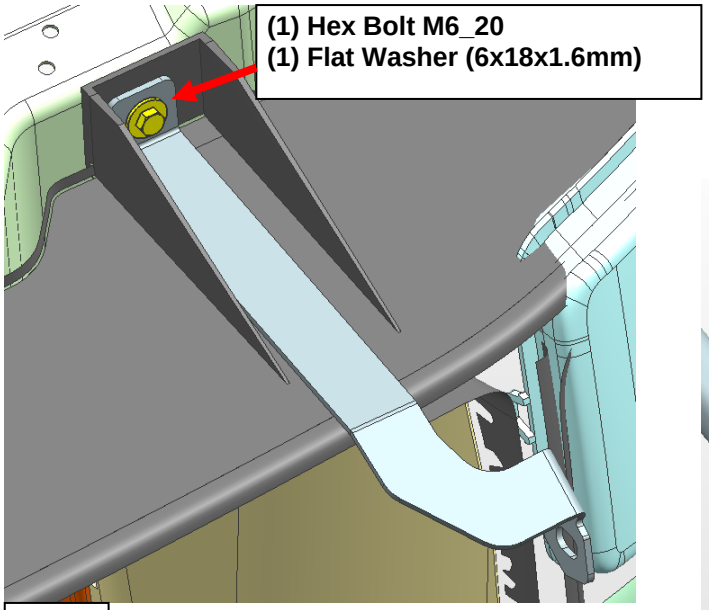

(Fig 7)

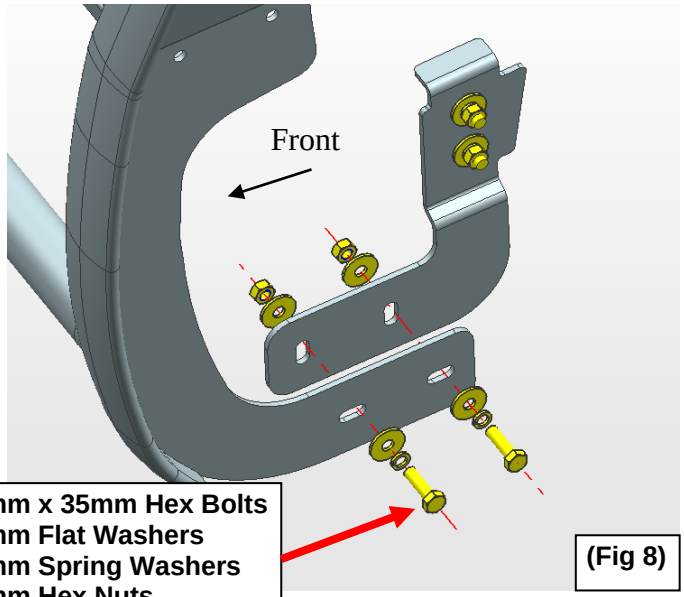

(Fig 8)

Passenger/left Side Installation Pictured

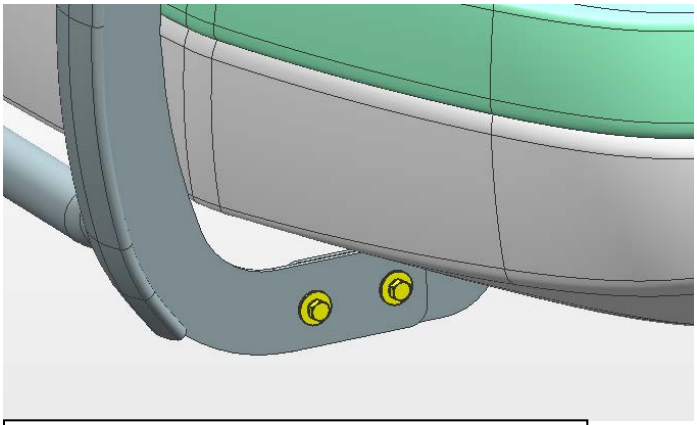

(Fig 9) Passenger/left Brackets installed

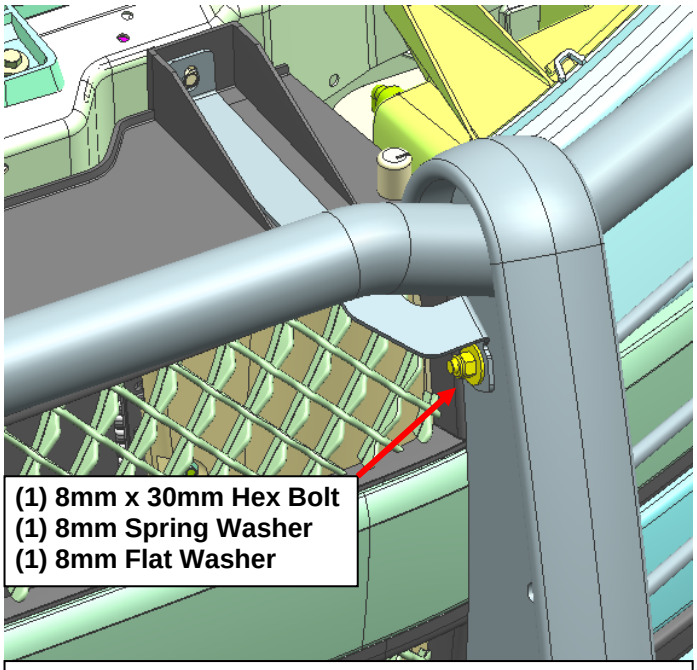

(Fig 10) Install Top Support Bracket to Grille Guard

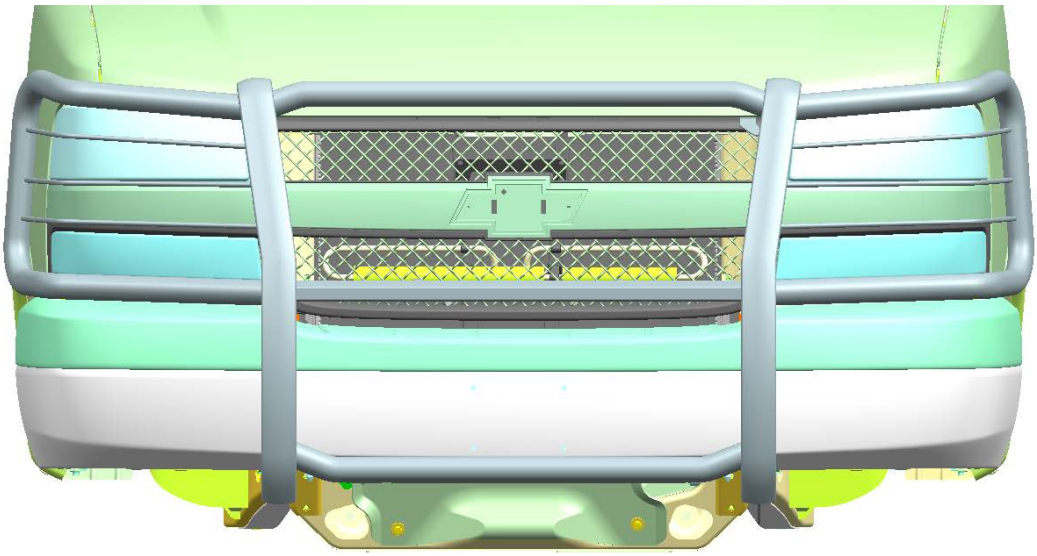

Complete Installation