BLACK HORSE OFF ROAD®

**TEL：1-866-XANATOS**

# INSTALLATION INSTRUCTIONS

**ARMOUR BULL BAR**
**18-24 Jeep Wrangler JL (Incl. 2020-24 diesel engine & 21-24 4xe /Excl. 21-24 V8 engine, 20-24 Rubicon Trim and trims with Fox Hydraulic Jounce Bumpers and upgraded 2.5in FOX Internal Bypass shocks with external reservoir), 20-24 Jeep Gladiator (Excl. Mojave & Rubicon trim and trims with Fox Hydraulic Jounce Bumpers and upgraded 2.5in FOX Internal Bypass shocks with external reservoir)**
**PART#JE01/AB-JE01-NL**

## PARTS LIST:

| | | | |
|---|---|---|---|
| 1 | Bull Bar | 8 | 10mm Lock Washers |
| 2 | Frame Bracket | 2 | 10-1.50mm Hex Nuts |
| 1 | Driver/Left Side Bull Bar Bracket | 2 | 8mm Nylon Lock Nuts |
| 1 | Passenger/Right Side Bull Bar Bracket | 2 | 8-1.25mm x 20mm Hex Bolts |
| 1 | Driver/Left Side Light Bar Bracket | 2 | 8-1.25mm x 16mm Hex Bolts |
| 1 | Passenger/Right Side Light Bar Bracket | 8 | 8mm x 24mm x 2mm Flat Washers |
| 1 | Mesh | 4 | 8mm Lock Washers |
| 1 | License Plate Bracket | 2 | 8mm Hex Nuts |
| 2 | Rubber Sensor Plugs | 2 | 6-1.0mm x 20mm Combo Bolts |
| 4 | 12-1.75mm x 35mm Hex Bolts | 2 | 6-1.0mm x 20mm Button Head Bolts |
| 8 | 12mm x 32mm OD x 3mm Flat Washers | 4 | 6mm x 18mm x 1.6mm Flat Washers |
| 4 | 12mm Nylon Lock Nuts | 2 | 6mm Lock Washers |
| 4 | 10-1.50mm x 25mm Hex Bolts | 2 | 6mm Hex Nuts |
| 2 | 10-1.50mm x 40mm Bolt-Nut Plates | 4 | 4mm x 10mm Button Head Bolts (Backup Accessories) |
| 4 | 10-1.50mm x 35mm Hex Bolts | 1 | Wrench S=4 (Backup Accessories) |
| 2 | 10mm Plastic Retainers | 1 | Wrench S=2.5 |
| 8 | 10mm x 30mm x 2.5mm Flat Washers | | |

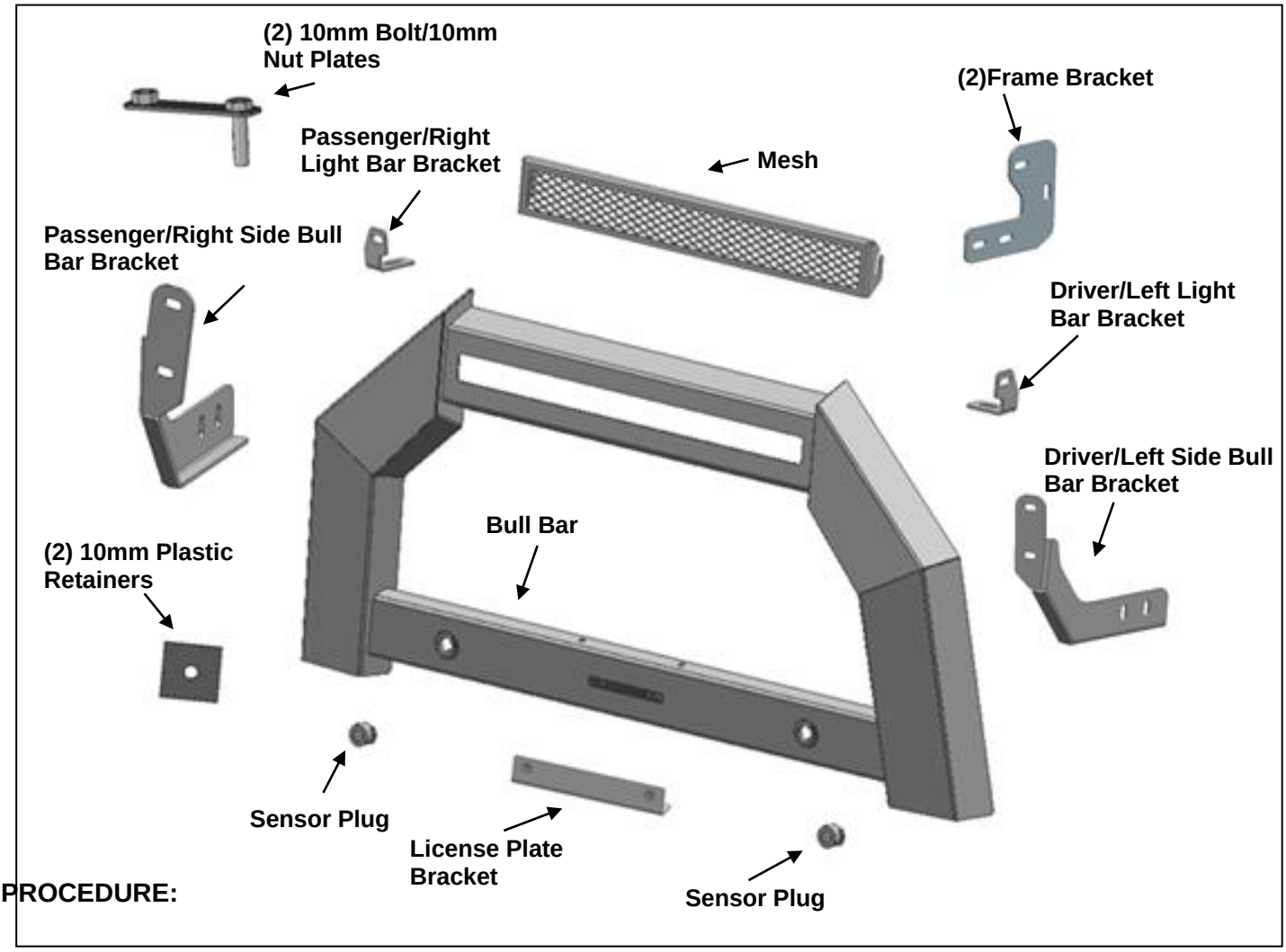


## PROCEDURE:

1. **REMOVE CONTENTS FROM BOX. VERIFY ALL PARTS ARE PRESENT. READ INSTRUCTIONS CAREFULLY BEFORE STARTING INSTALLATION. CUTTING MAY BE REQUIRED. ASSISTANCE IS RECOMMENDED.**
2. Remove the plastic splash guard from under the front bumper and place it on a clean, stable work surface, **(Figures 1 & 6)**. Models with steel skid plate, skid plate must be removed and cannot be reinstalled.

**Models with plastic splash guard:**

- **a.** Starting on the passenger/right side, locate the lower hex shaped hole in the outside of the frame, **(Figure 2)**. Insert (1) 10mm Bolt/Nut Plate, (end with welded nut first), into the open end of the bottom of the frame and push the welded hex bolt through the hex shaped hole, **(Figure 3)**. Thread (1) 10mm Plastic Retainer onto the Bolt/Nut Plate to hold it in position. **NOTE**: Plastic Retainer is designed to hold the Bolt Plate in position to help with Bracket installation. Use is not mandatory. **IMPORTANT**: Temporarily remove the steel frame bracket for the splash guard if more room is necessary to install the Bolt/Nut Plate, **(Figure 1)**.
- **b.** Select one Frame Bracket, **(Figure 4)**. Attach the Bracket to the Frame with the Bolt Nut Plate and (1) 10mm Flat Washer, (1) 10mm Lock Washer and (1) 10mm Hex Nut. Leave loose at this time. Grab the threaded end of the 10mm Bolt/Nut Plate and rotate it until the top end with the welded Nut lines up with the round hole in the outside of the frame and the top mounting hole in the Bracket. Attach the Bracket to the Bolt/Nut Plate with (1) 10mm x 35mm Hex bolt, (1) 10mm Lock Washer and (1) 10mm Flat Washer, **(Figures 4 & 5)**. Snug but do not fully tighten Bracket hardware at this time. Reinstall the steel frame bracket for the splash guard if previously removed.

**Models with steel skid plate:**

- **a.** Select one Frame Bracket. Attach the Bracket to the lower threaded hole in the outside of the frame with (1) 10mm x 35mm Hex bolt, (1) 10mm Lock Washer and (1) 10mm Flat Washer, **(Figure 4)**. Do not tighten.
- **b.** Repeat the previous Steps to install the Bolt/Nut Plate into the open end of the frame and up to the top mounting hole, **(Figure 3)**. Attach the top of the Bracket to the Nut end of the Bolt /Nut Plate with (1) 10mm x 35mm Hex bolt, (1) 10mm Lock Washer and (1) 10mm Flat Washer, **(Figures 4 & 5)**. Snug but do not fully tighten Bracket hardware at this time.

3. Repeat the appropriate **Step 2** for driver/left side Mounting Bracket installation.
4. Position the splash guard back up to the vehicle and temporarily attach with the factory hardware. Trace the location of the Mounting Brackets onto the back of the splash guard, **(Figure 6)**. Remove the splash guard and move it to a clean stable work surface. Carefully cut openings in the splash guard to clear the Frame Brackets. **NOTE:** To maintain the integrity of the plastic Splash Guard, remove only material necessary to clear the Brackets. Make small cuts and check the fit often during installation.
5. Reinstall the steel bracket, (if removed-see **Fig. 1**), and splash guard.
6. Select the driver side Bull Bar Bracket. Position the Bull Bar Bracket on the outside of the Frame Bracket. Use the provided (2) 12mm x 35mm Hex Bolts, (4) 12mm x 30mm Flat Washers and (2) 12mm Nylon Lock Nuts to attach the Bull Bar Bracket to the Frame Bracket, **(Figure 7)**.
   Repeat this Step to attach the passenger side Bull Bar Bracket to the Frame Bracket.
7. Relocation of front license plate is not required, but strongly recommended.
   - **a.** Attach the License Plate Bracket to the Bull Bar with (2) 6mm Button Head Bolts, (4) 6mm Flat Washers, (2) 6mm Lock Washers and (2) 6mm Hex Nuts, **(Figure 8)**. Use (2) 6mm Combination Bolts to attach the front license plate to the Bracket, **(Figure 8)**.
8. **Mesh and LED Light installation, (LED light sold separately)**. Select the driver/left side Light Bar Bracket. Attach the Bracket to the back of the mounting plate on the Bull Bar with (1) 8mm x 20mm Hex Bolt, (2) 8mm Flat Washers, (1) 8mm Lock Washer and (1) 8mm Hex Nut, **(Figure 9)**. Repeat this step to attach the passenger/right side Light Bar Bracket to the back of the Bull Bar. Do not tighten hardware.

**LED Light Installation**

- **a.** Use (2) 8mm x 16mm Hex Bolts, (2) 8mm Lock Washers and (2) 8mm Flat Washers to attach the Light Bar Brackets to the Bull Bar, **(Figure 10)**.

**b.** Follow the light manufacturer's instructions to attach the Bull Bar.
**c.** Follow light manufacturer's instructions to properly wire the Bull Bar.

**Mesh installation**

**a.** Use (2) 8mm x 16mm Hex Bolts, (4) 8mm Flat Washers, (2) 8mm Lock Washers and (2) 8mm Hex Nuts to attach the Mesh to the inside surface of the Light Bar Brackets, **(Figure 11)**.
**b.** Level and adjust the Brackets to the Mesh Panel and fully tighten hardware.

**9.** With assistance, hold up the assembled Bull Bar to the Bull Bar Brackets. Align the (2) bottom holes on the Uprights with the Brackets. Bolt the assembled Bull Bar to the Brackets with (4) 10mm x 25mm Hex Bolts, (4) 10mm Lock Washers and (4) 10mm x 30mm Flat Washers, **(Figures 12)**.
**10.** Level and adjust the Bull Bar properly and tighten all hardware.
**11.** Select the (2) Sensor Plugs. Push the sensor plugs into the sensor sleeves behind the Bull Bar, **(Figure13)**. .
**12.** Level and adjust the Bull Bar properly and tighten all hardware. Reinstall the tow hook if removed.
**13.** Do periodic inspections to the installation to make sure that all hardware is secure and tight.

**To protect your investment**, wax this product after installing. Regular waxing is recommended to add a protective layer over the finish. Do not use any type of polish or wax that may contain abrasives that could damage the finish. Mild soap may be used to clean the Bull Bar.

## Passenger/right Side Installation Pictured

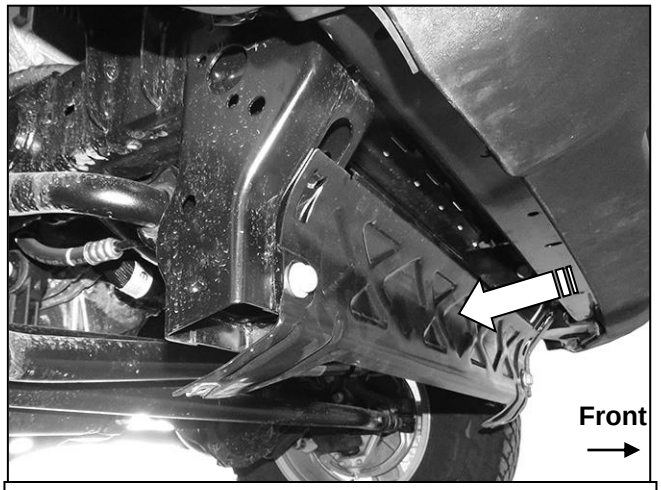


**(Fig 1) Remove splash guard and bracket (arrow)**

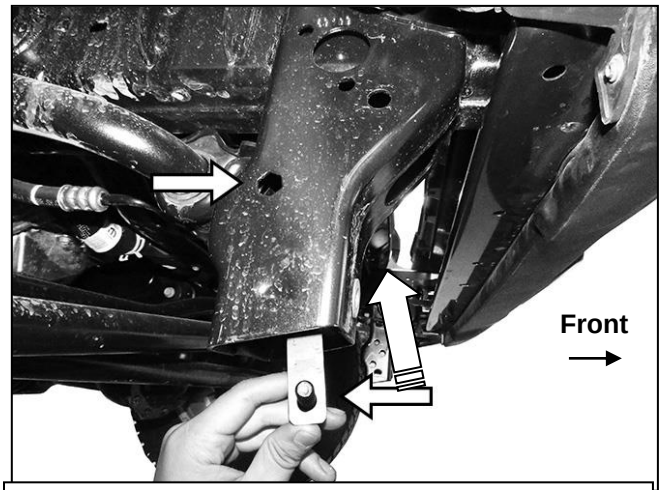


**(Fig 2) Insert 10mm Bolt/Nut Plate into bottom of frame and out hex hole in side of frame (arrows)**

## Passenger/right Side Installation Pictured

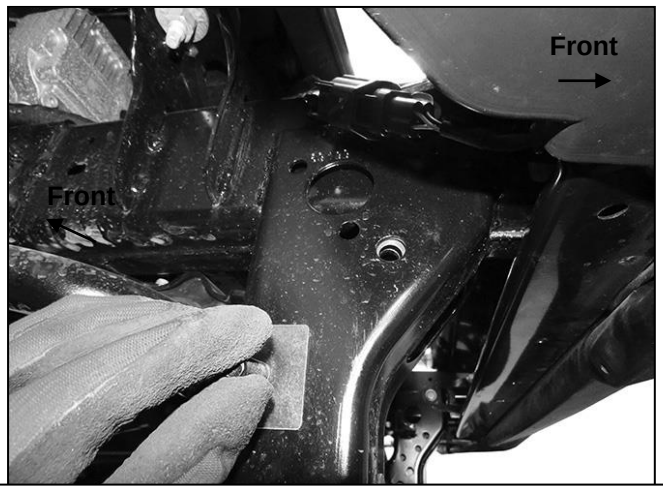


(Fig 3) Use Retainer to hold 10mm Bolt/Nut Plate. Rotate Bolt/Nut Plate to line up Nut with factory hole

Models with plastic splash guard:
10mm Hex Nut
10mm Lock Washer
10mm Flat Washer

10mm x 35mm Hex Bolt
10mm Lock Washer
10mm Flat Washer

Models with steel skid plate:
10mm Hex Nut
10mm Lock Washer
10mm Flat Washer

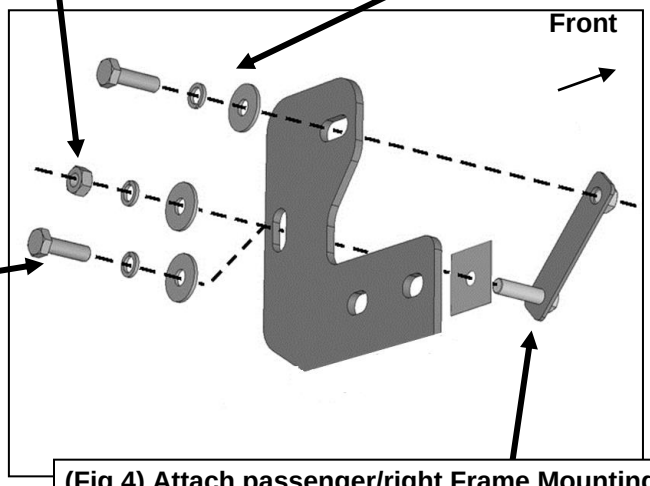


(Fig 4) Attach passenger/right Frame Mounting Bracket to 10mm Bolt/Nut Plate and Retainer

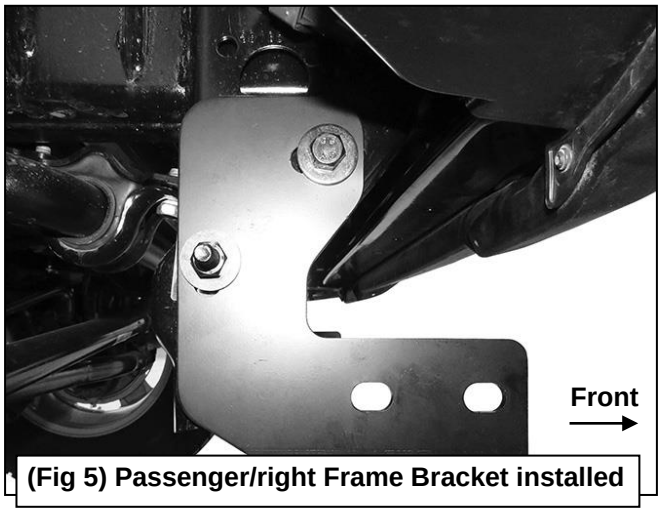


(Fig 5) Passenger/right Frame Bracket installed

Cut two openings to clear the Mounting Brackets

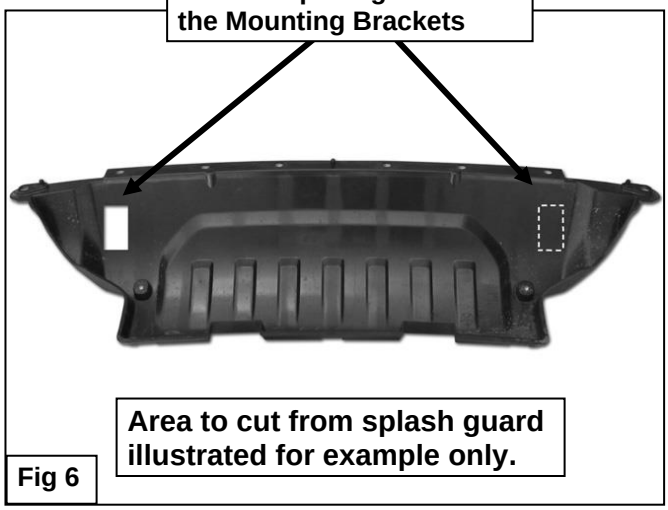

Area to cut from splash guard illustrated for example only.

Fig 6

## Passenger/right Side Installation Pictured

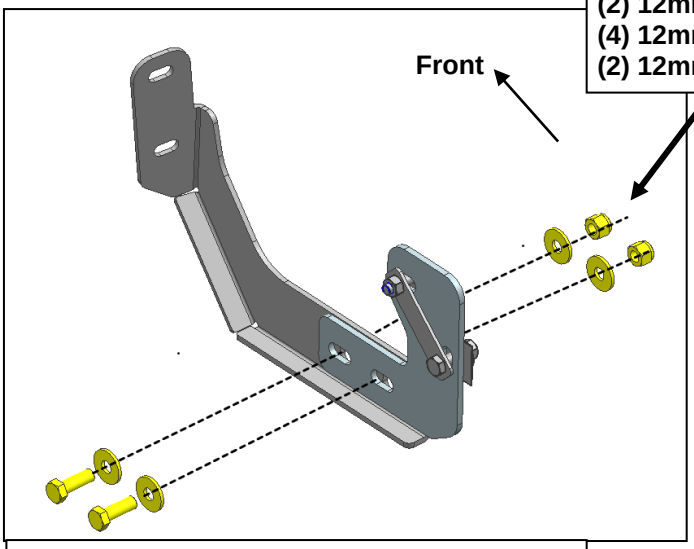


(2) 12mm x 35mm Hex Bolts
(4) 12mm Flat Washers
(2) 12mm Nylon Lock Nuts

(Fig 7) Driver side Frame Bracket attached to Bull Bar Bracket Pictured

(2) 6mm Combo Bolts

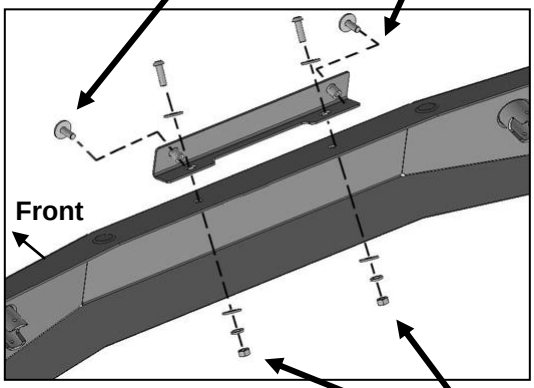


(Fig 8) License Plate Bracket attached to the Bull Bar

(2) 6mm Button Head Bolts
(4) 6mm Flat Washers
(2) 6mm Lock Washers
(2) 6mm Hex Nuts

(1) 8mm x 20mm Hex Bolt
(2) 8mm Flat Washers
(1) 8mm Lock Washer
(1) 8mm Hex Nut

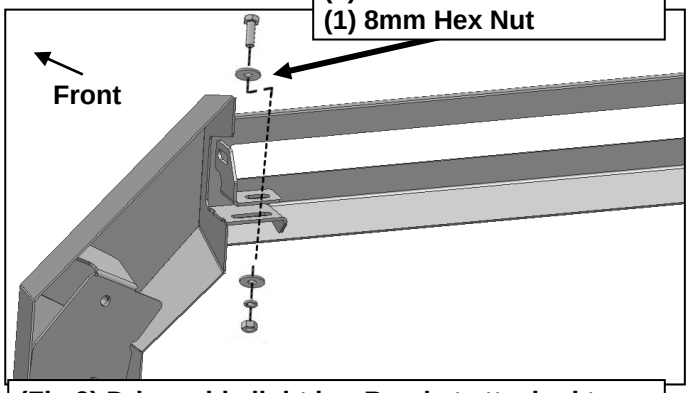


(Fig 9) Driver side light bar Bracket attached to the Bull Bar

8mm x 16mm Hex Bolt
8mm Lock Washer
8mm Flat Washer

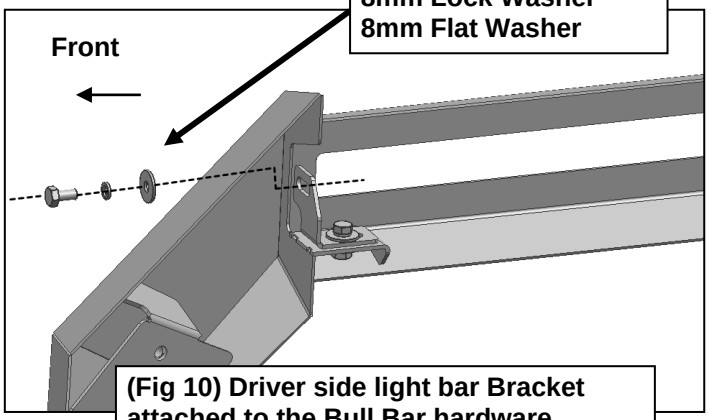


(Fig 10) Driver side light bar Bracket attached to the Bull Bar hardware

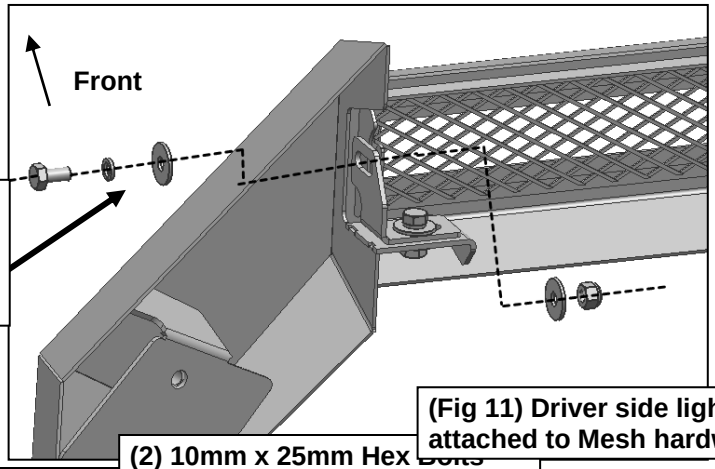


**(1) 8mm x 16mm Hex Bolt**
**(2) 8mm Flat Washers**
**(1) 8mm Lock Washer**
**(1) 8mm Hex Nut**

**(Fig 11) Driver side light bar Bracket attached to Mesh hardware**

**(2) 10mm x 25mm Hex Bolts**
**(2) 10mm Lock Washers**
**(2) 10mm x 30mm Flat Washers**

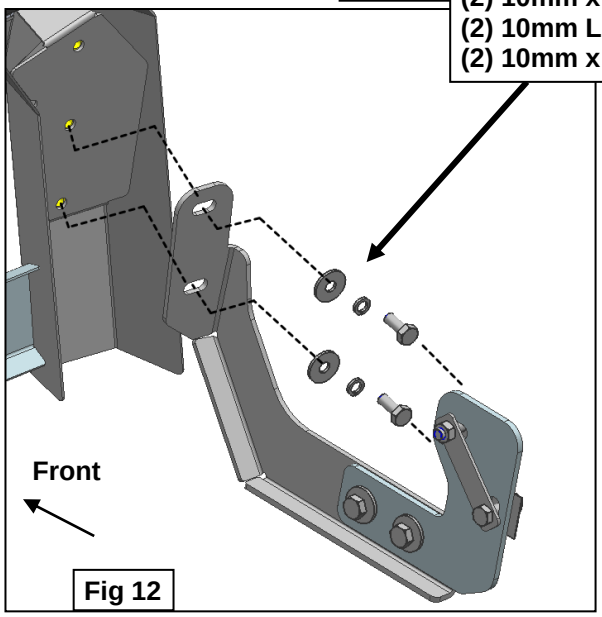


**Fig 12**

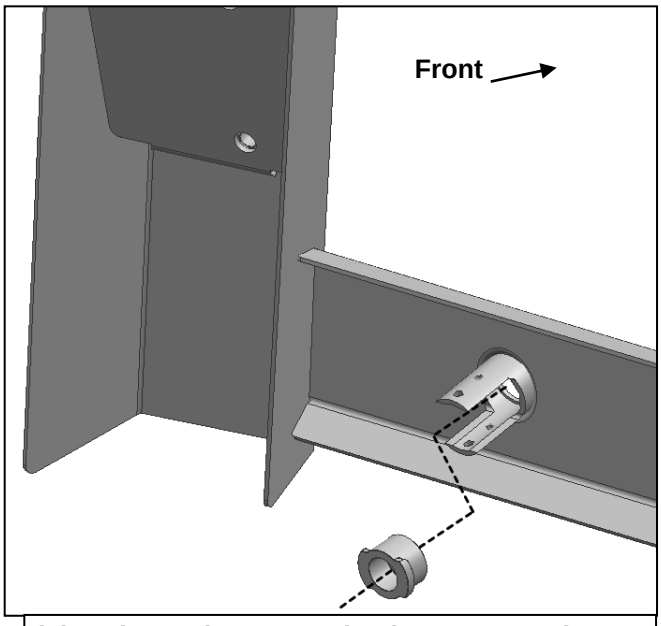


**(Fig 13) Attach Sensor Plug into Sensor Sleeve**