# INSTALLATION INSTRUCTION

ITEM NUMBER: 8B0520SS-DL

BRACKETS FOR S/S UNIVERSAL REAR BUMPER GUARD (DOUBLE LAYER) FOR HONDA CRV 07-15

**NOTICE:**

- The figures here are for reference only and may have differences with the actual product you received, however they share the same assembly way.
- Please read the instruction completely for easy installation, which will also help you to avoid scratches or other potential damages to your appealing car.
- Please periodically check and retighten all the hardware and clean the investment for a refresh look.

**PART LIST**

| No. | Qty | Name | No. | Qty | Name |
|---|---|---|---|---|---|
| ① | 1 | Rear bar | 6 | 4 | M8*25 Hex bolt |
| 2 | 1 | Bracket-A-L | 7 | 4 | M10*35 Hex bolt |
| | | | 8 | 4 | M10*35 Hex bolt |
| 3 | 1 | 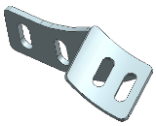 Bracket-A-R | 9 | 12 | D10 Flat washer |
| | | | 10 | 8 | D10 Spring washer |
| 4 | 1 | Bracket-B-L | 11 | 4 | D10 Hex nut |
| | | | | | |
| 5 | 1 | Bracket-B-R | | | |
| | | | | | / |

**ASSEMBLY PROCEDURE:**

Step 1: Check all the contents are available in accordance with the above list.

Step 2: Remove the bottom factory skid plate, using M10*35 Hex bolts (8) to install Bracket-B-L&R. Do not tighten all the bolts. **(FIG.2&3)**

Step 3: Install the factory skid plate. Then install the rear bar on Bracket-A-L &B. Connect Bracket-A & B as **FIG.1.** Do not tighten all the bolts.

Step 4：Test and make sure that the rear bar is steadily fixed, and then tighten all the hardware.

Step 5：Install the factory skid plate to original position, the small size skid plate is no need to install.

Step 6：Installation is finished.

**FIG.1**

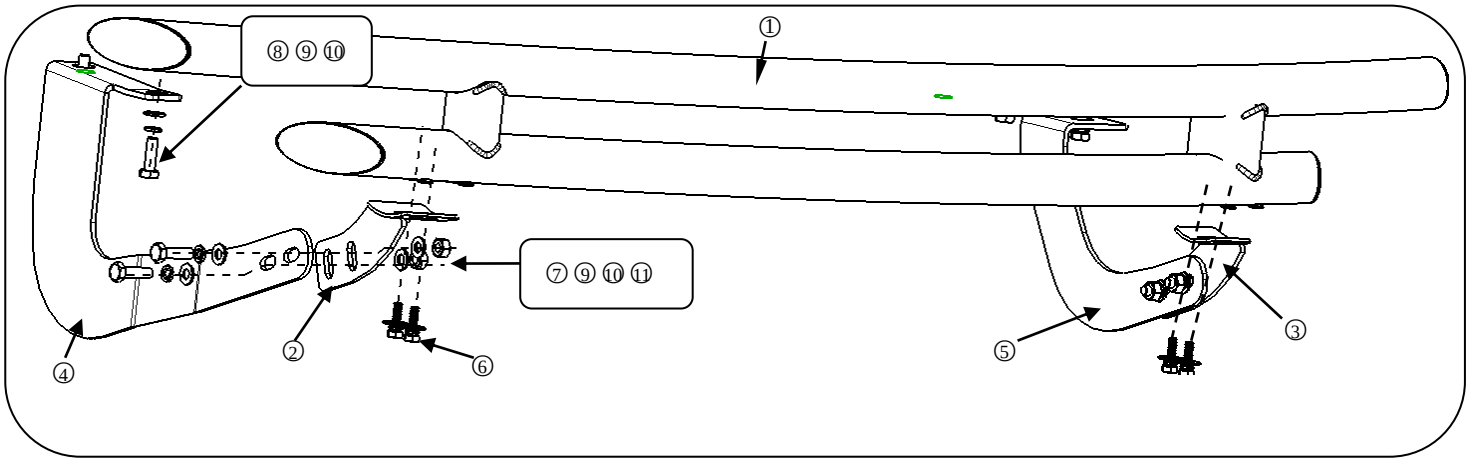


Remove the skid plate

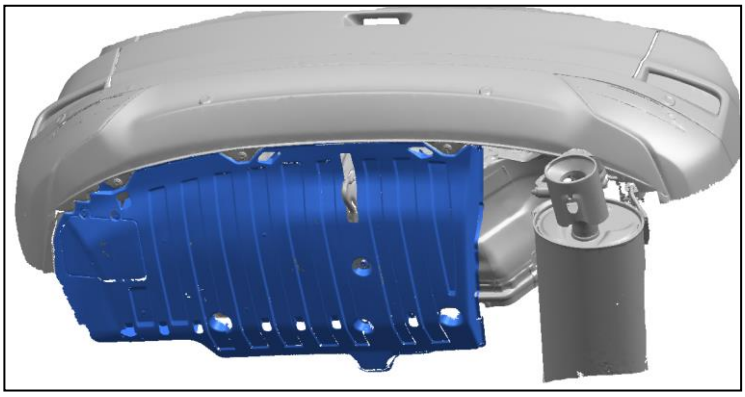

Bracket-B will across the skid plate.

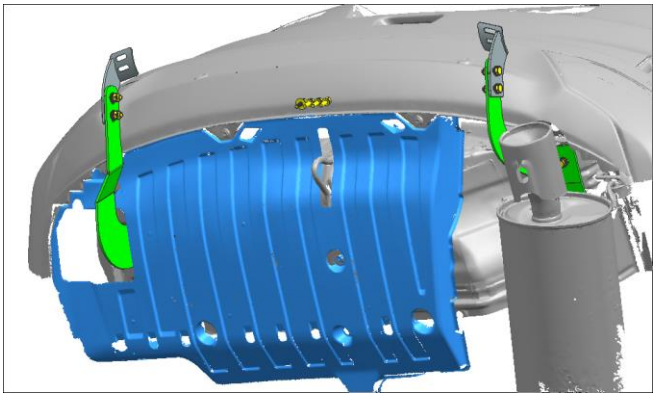

FIG.2

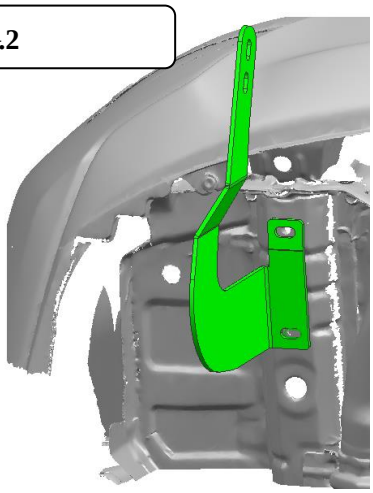

FIG.3

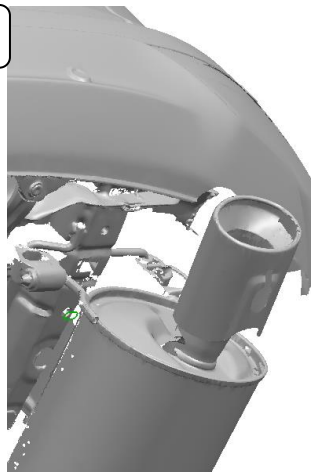

**NOTE：** Any damages and losses caused by improper installation and application, goes beyond our quality warranty.