INSTALLATION INSTRUCTIONS

TRANSPORTER RUNNING BOARD BRACKET FOR 15-20 FORD TRANSIT VAN (FULL SIZE)

PART # TR-F63596S

PARTS LIST:

1	31-inch Steel Running Board	1	8-1.25mm x 40mm Hex Bolt
1	96-inch Steel Running Board	13	8-1.25mm x 25mm Assembling Bolt
5	PS/DS Front Mounting Brackets	7	8mm x 24mm x 2mm Flat Washer
1	Driver/left Side Rear Mounting Bracket	12	8mm Clip Nuts
2	10mm x 35mm Button Head Bolt Plate	1	8-1.25mm Hex Nut
2	10mm Plastic Retainer	6	8-1.25mm Nylon Lock Nuts
4	10mm x 30mm x 2.5mm Flat Washer	14	6mm T-Bolt Plates
2	10-1.5mm Nylon Lock Nuts	14	6mm x 22mm x 2mm Flat Washer
3	8mm U-Bolts	14	6mm Lock Washers
1	8mm Threaded Insert Tool Handle	14	6mm Hex Nuts
1	8-1.25mm Threaded Insert		

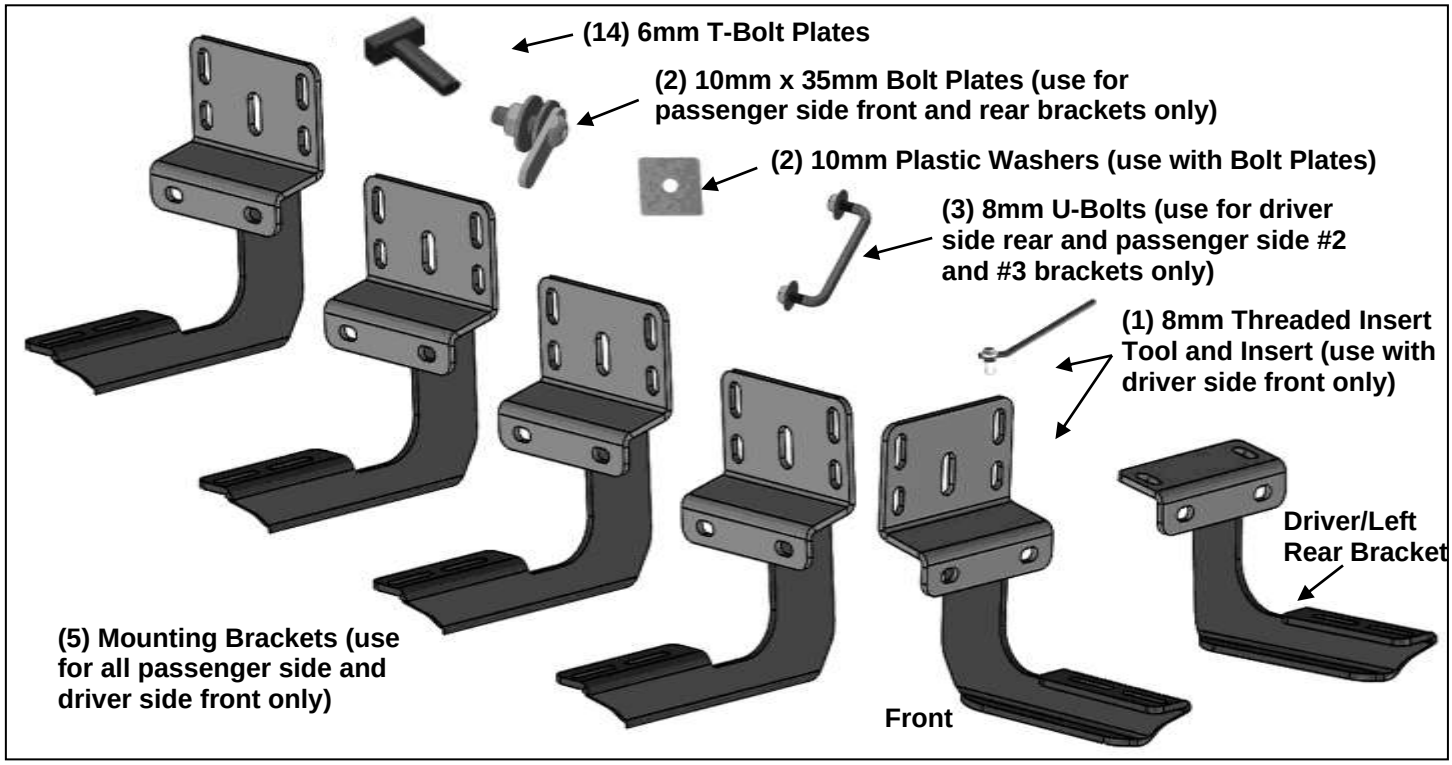

PROCEDURE:

REMOVE CONTENTS FROM BOX. VERIFY ALL PARTS ARE PRESENT. READ INSTRUCTIONS CAREFULLY BEFORE STARTING INSTALLATION. DRILLING IS REQUIRED. ASSISTANCE IS RECOMMENDED.

1. Start the installation under the passenger side of the vehicle. Release the lower clips from the plastic trim along the bottom of the body, **(Figure 1)**. **NOTE**: From below, insert a small or medium sized flat blade screwdriver into the rectangular hole in the center of the clip. Carefully release each side (inside to outside, not front to back) of the plastic clip and pull the rectangular center pin down from the clip, **(Figure 2)**. Do not twist the clip, gently pull it straight down once it is released. It is not necessary to completely remove the trim, only release the clips attaching the bottom of the trim to the vehicle.
2. Locate the factory hole approximately 24” back from the front of the body, **(Figure 3)**. Remove excess undercoating from all mounting locations so that Brackets will install flat against body panel and pinch weld.
3. Select (1) 10mm Bolt Plate, (1) 10mm Flat Washer and (1) 10mm Plastic Retainer, **(Figure 4)**. Thread the Retainer part way onto the Bolt Plate. Insert the Bolt Plate into the hole and tighten the Retainer against the body panel. Slide the 10mm Flat Washer onto the end of the Bolt Plate, **(Figure 5)**. **IMPORTANT:** The Plastic Retainer is designed to prevent the Bolt Plate from falling into the body panel and to aid in Bracket installation.

4. Select (1) Mounting Bracket. Line up the long slot in the center of the Bracket with the Bolt Plate and Flat Washer. Attach the Bracket to the Bolt Plate with (1) 10mm Flat Washer, (1) 10mm Lock Washer and (1) 10mm Hex Nut, **(Figure 6)**. Push the Bracket up tight against the bottom of the body and temporarily tighten the Hex Nut.

5. Mark the location of the (2) bottom slots in the Bracket onto the pinch weld, **(Figure 6)**. Remove the Bracket. Use a 3/8" drill bit to drill (2) holes through the pinch weld only. **NOTE**: Drill the holes as far away from the bottom edge of the pinch weld as possible. **IMPORTANT**: Do not drill through the welds in the pinch weld. Slide the Bracket forward or back to move the slots away from the factory spot welds. Do not drill into or through the outer plastic rocker panel cover.

> **IMPORTANT!** Any cutting or drilling tool may break or shatter. Government regulations require safety glasses & equipment at all times when cutting or drilling.

6. Select (2) 8mm Clip Nuts. Side the Clip Nuts over the pinch weld with the nut toward the outside, **(Figure 7)**. Reattach the Bracket to the Bolt Plate, **(Step 4)**. Attach the Bracket to the pinch weld with (2) 8mm x 25mm Assembling Bolt, **(Figure 8)**. Leave hardware loose at this time.

7. Move along the body to the 2nd mounting location. Determine if the vehicle is equipped with factory mounting studs along the body panel.

Models without factory studs:

Locate the (2) factory holes in the side of the body panel, **(Figure 9)**. Insert (1) 8mm Long U-Bolt into and through the (2) holes, **(Figure 10)**. Thread 8mm Plastic Retainers onto the ends of the U-Bolt to hold it in place. Select (1) Passenger side Bracket.

Attach the Bracket to the U-Bolt with (2) 8mm Flat Washers, and (2) 8mm Nylon Lock Nuts, **(Figures 11 & 12)**.

Repeat **Steps 5 & 6** to drill and attach the bottom of the Bracket to the back of the pinch weld, **(Figure 15)**.

Repeat to install (1) Bracket in the 3rd mounting location, **(Figures 13 & 15)**.

Models with factory studs:

Attach (1) passenger side Bracket to the factory studs with (2) 8mm Flat Washers, and (2) 8mm Nylon Lock Nuts, **(Figures 14 & 15)**.

Repeat **Steps 5 & 6** to drill and attach the bottom of the Bracket to the back of the pinch weld.

Repeat to install (1) Mounting Bracket in the 3rd mounting location.

8. Continue along the side of the vehicle to the 4th mounting location, **(Figure 16)**. Repeat **Steps 2—6** to install (1) passenger side Mounting Bracket in the 4th (last) mounting location, **(Figures 17 & 18)**.

9. Select the long passenger side Running Board. Place the Running Board on top of the (4) Brackets. Select (8) 6mm T-Bolt Plates. Locate the channels in the bottom of the Running Board, **(Figure 19)**. Insert the Bolt Plates into the channels in the bottom of the Running Board closest to the Brackets. Lift the Running Board up and guide the studs through the Brackets.

10. Attach the Running Board to the Brackets with (8) 6mm Flat Washers, (8) 6mm Lock Washers and (8) 6mm Hex Nuts, **(Figure 20)**. **NOTE**: The Running Board is designed to fit close to the vehicle. It may be necessary to loosen the Bracket hardware and tilt the Brackets downward to insert the Running Board between the Brackets and the body. Do not tighten hardware at this time.

11. Level and adjust the Running Board and fully tighten all hardware. Reinstall the plastic trim along the bottom of the body. **IMPORTANT**: Minor trimming may be required around 8mm Clip Nuts. Temporarily remove the Running Board. Use a sharp knife or hacksaw blade to trim plastic as required.

12. Move to the driver side of the vehicle. Repeat **Step 1**, **(Figures 1 & 2)**, to release the clips attaching the plastic trim to the bottom of the driver side.

13. Determine if the vehicle is equipped with factory mounting studs at the front of the body panel.

Models without factory studs:

Identify the front Bracket mounting location approximately 10" back from the front of the body, **(Figure 21)**.

Select (1) passenger/driver side front Bracket. Hold the Bracket firmly in position against the bottom and side of the body panel and mark the top left hole location onto the inner body panel. Also mark the (2) lower mounting locations onto the back of the pinch weld, **(Figure 21)**.

IMPORTANT: Do not drill through the welds in the pinch weld. Slide the Bracket forward or back

to move the slots away from the factory spot welds. Do not drill into or through the outer plastic rocker panel cover.

Move the Bracket out of the way and drill a 7/16” hole through the body panel for the top of the Bracket, **(Figures 21 & 24B)**. Select (1) 8mm Threaded Insert, (1) 8mm x 40mm Hex Bolt, (1) 8mm Hex Nut, (1) 8mm Flat Washer and (1) 8mm Insert Tool. Thread the Hex Nut onto the Hex Bolt. Assemble the Tool as pictured in **Figure 22**. Use a 13mm wrench to hold the Hex Bolt to prevent it from spinning. Turn the Hex Nut clockwise to pull/expand the insert in the hole, **(Figure 23)**. Tighten the Hex Nut until the Insert is fully installed, **(Figures 24A & 24B)**. Do not overtighten the Hex Nut.

Next, repeat **Steps 5 & 6** to drill the pinch weld and attach the bottom of the Bracket to the pinch weld, **(Figures 24B & 25)**. Attach the top of the Bracket to the previously installed Threaded Insert with (1) 8mm x 25mm Assembling Bolt, **(Figure 25)**. Leave hardware loose at this time.

Models with factory studs:

Select (1) passenger/driver side front Bracket. Attach the Bracket to the factory studs with (2) 8mm Flat Washers and (2) 8mm Nylon Lock Nuts, **(Figures 26 & 27)**.

Repeat **Steps 5 & 6** to drill and attach the bottom of the Bracket to the back of the pinch weld, **(Figure 27)**.

14. Continue along the side of the body to the driver side rear mounting location approximately 24” back from the front corner of the body, **(Figures 21 & 26)**. Select the unique driver side rear Mounting Bracket. Hold the Bracket firmly against the bottom and back of the body panel. Slide the Bracket forward or back as necessary to avoid drilling through any welds on the pinch weld. Mark all (4) locations to drill, **(Figure 28)**.

15. Drill (2) 7/16” holes through the bottom of the body panel as marked, **(Figure 28)**. Next, repeat **Step 5** to drill through the pinch weld to attach the bottom of the Bracket. Insert (1) 8mm Long U-Bolt into and through the (2) drilled 7/16” holes, **(Figure 29)**. Select the passenger/right side Rear Bracket. Attach the top slots on the Bracket to the U-Bolt with (2) 8mm Flat Washers, and (2) 8mm Nylon Lock Nuts, **(Figure 30)**. Repeat **Steps 5 & 6** to drill and attach the bottom of the Bracket to the back of the pinch weld. Leave all hardware loose at this time.

16. Select the driver side Running Board. Place the Running Board on top of the (2) Brackets. Select (4) 6mm T-Bolt Plates. Repeat **Steps 10 & 11** to attach the Running Board to the (2) Brackets.

17. Level and adjust the Running Board and fully tighten all hardware. Reinstall the plastic trim along the bottom of the body. **IMPORTANT**: Minor trimming may be required around 8mm Clip Nuts. Use a sharp knife or hacksaw blade to trim plastic as required.

18. Do periodic inspections to the installation to make sure that all hardware is secure and tight.

To protect your investment, wax this product after installing. Regular waxing is recommended to add a protective layer over the finish. Do not use any type of polish or wax that may contain abrasives that could damage the finish.
Mild soap may be used also to clean the Running Board.

Passenger/right Side Installation Pictured

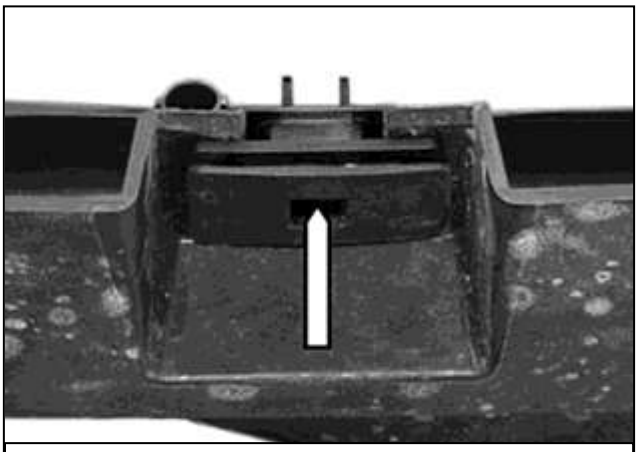

(Fig 1) Insert flat blade screwdriver into square opening in center of plastic clip to release

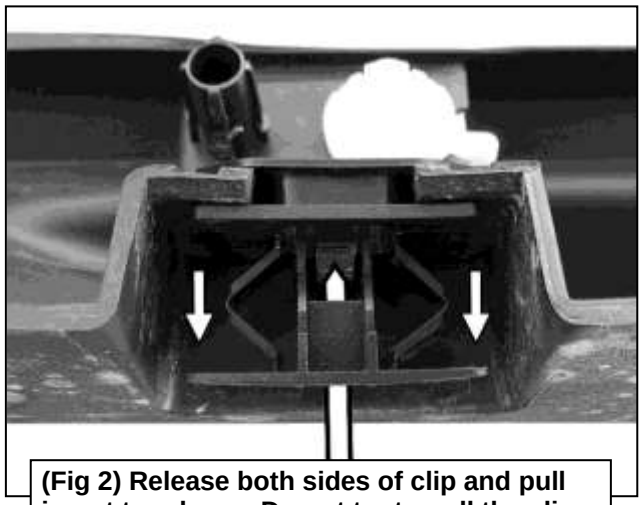

(Fig 2) Release both sides of clip and pull insert to release. Do not try to pull the clip out of the trim, only release clip as pictured

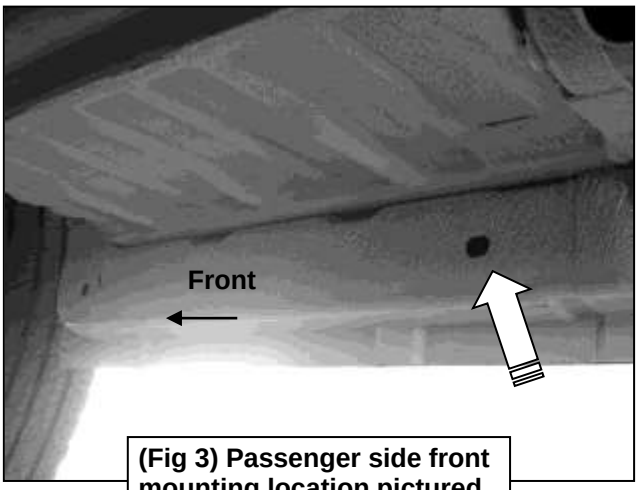

(Fig 3) Passenger side front mounting location pictured

(Fig 4) Bolt Plate with Plastic Retainer

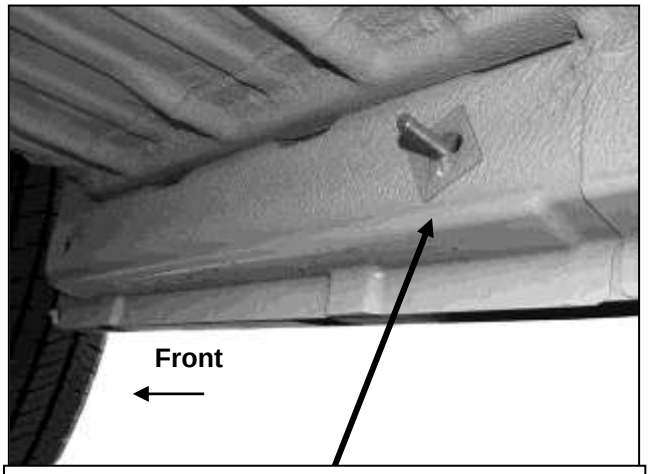

(Fig 5) Tighten Plastic Retainer to hold Bolt Plate

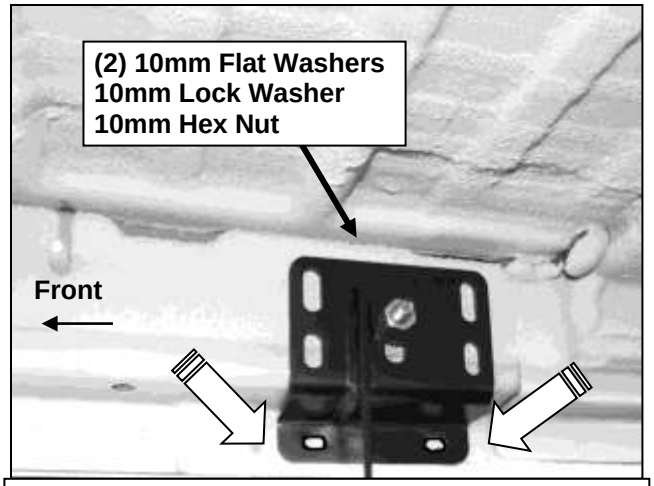

(Fig 6) Push Bracket up tight against body panel. Mark location of bottom slots onto pinch weld

Passenger/right Side Installation Pictured

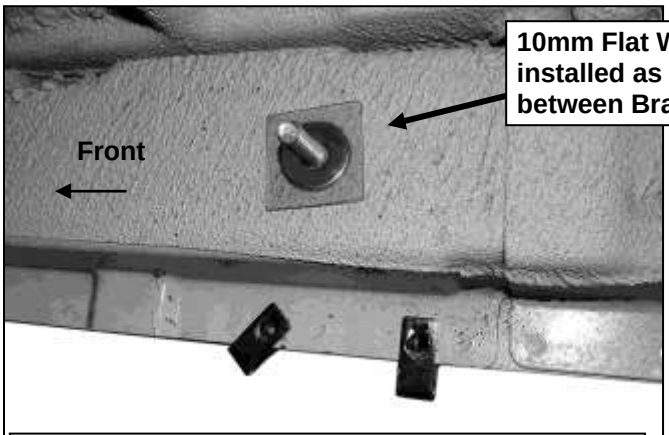

(Fig 7) Drill 3/8" holes through pinch weld. Slide 8mm Clip Nuts onto pinch weld over holes

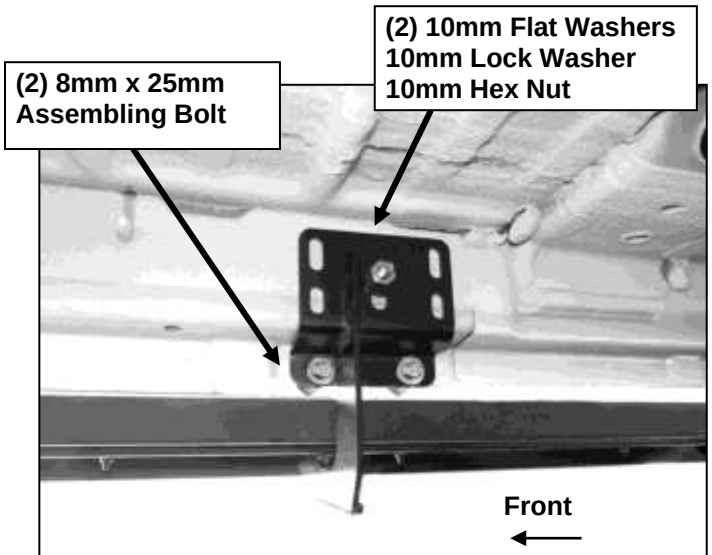

(Fig 8) Passenger side front Bracket installed

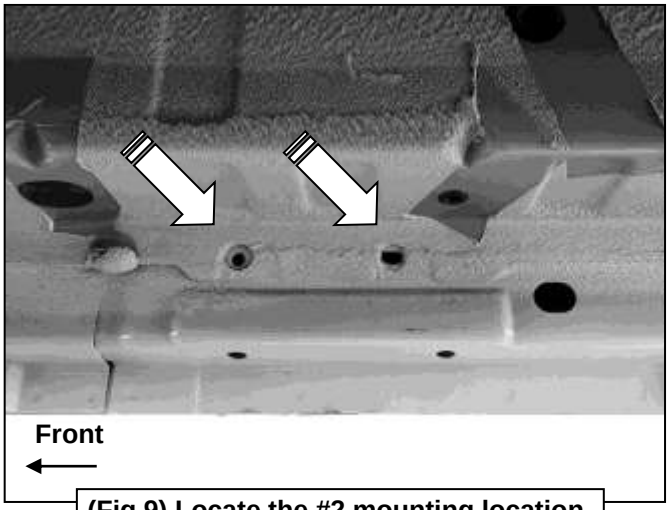

(Fig 9) Locate the #2 mounting location for Bracket. Insert 8mm U-Bolt into and out factory holes in body panel

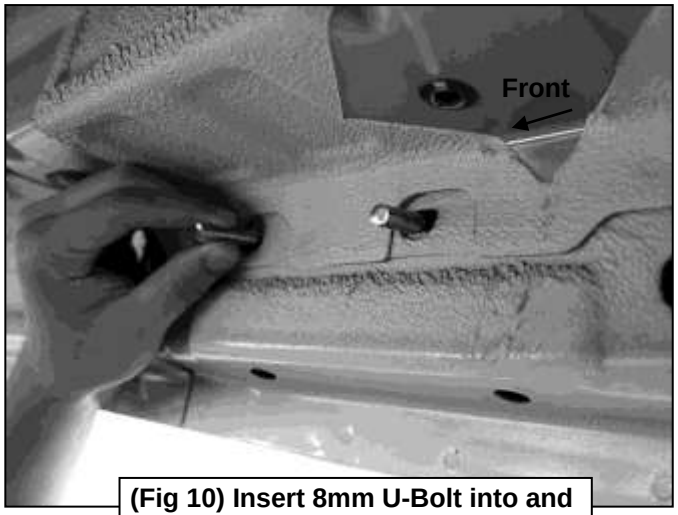

(Fig 10) Insert 8mm U-Bolt into and out factory holes in body panel

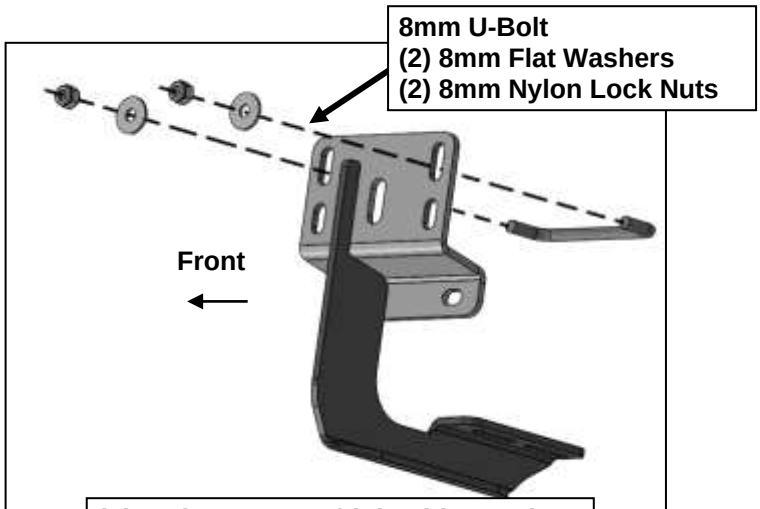

(Fig 11) Passenger/right side Bracket attached to body panel with U-Bolt

Passenger/right Side Installation Pictured

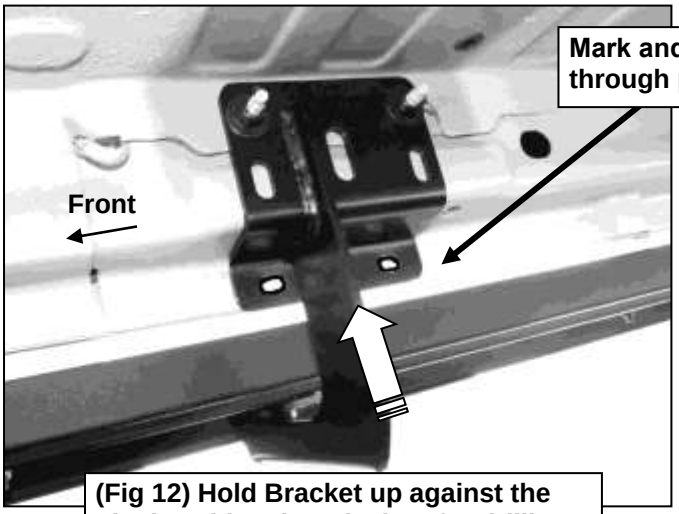

(Fig 12) Hold Bracket up against the pinch weld and mark slots for drilling

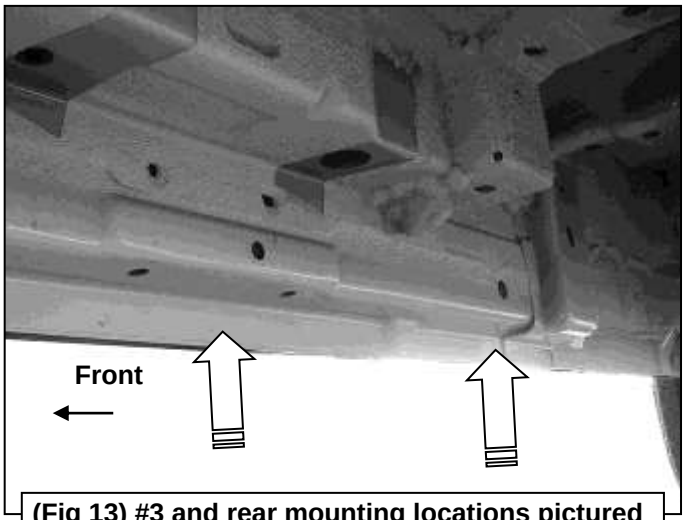

(Fig 13) #3 and rear mounting locations pictured

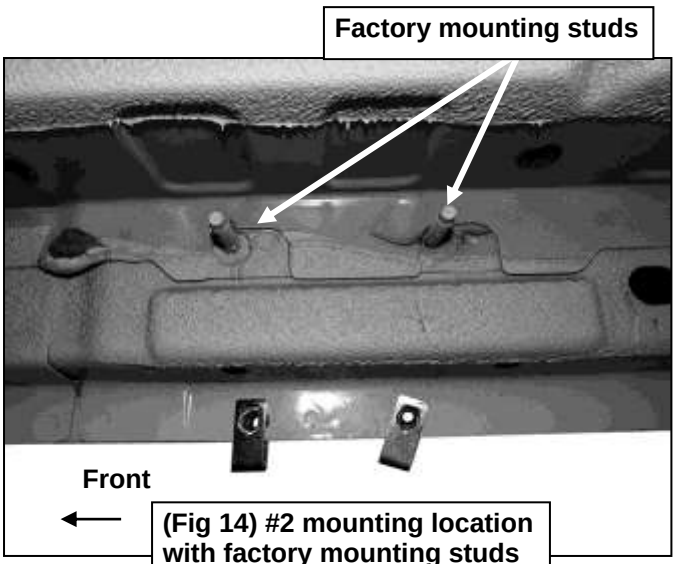

(Fig 14) #2 mounting location with factory mounting studs

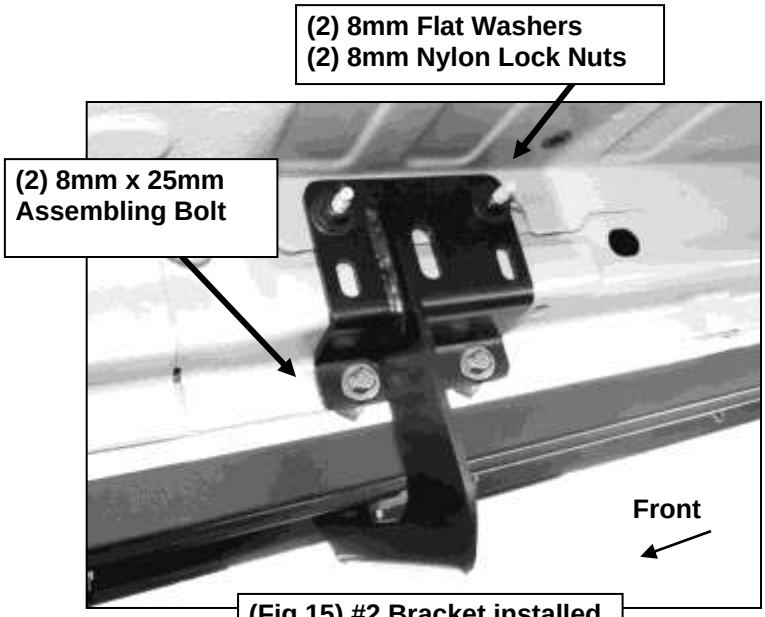

(Fig 15) #2 Bracket installed

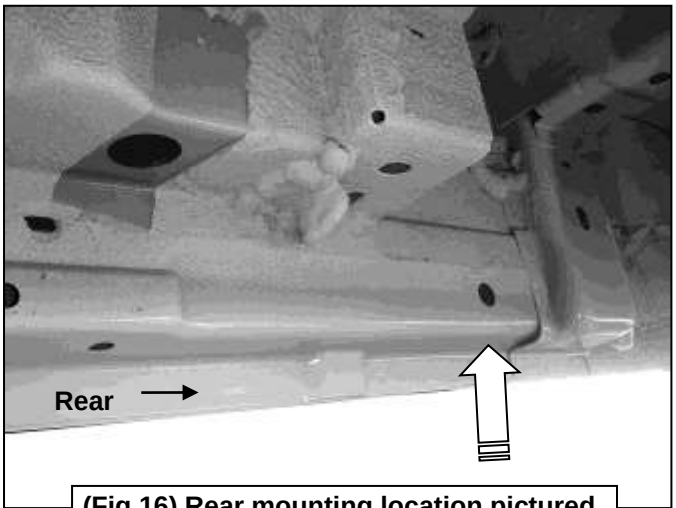

(Fig 16) Rear mounting location pictured

Passenger/right Side Installation Pictured

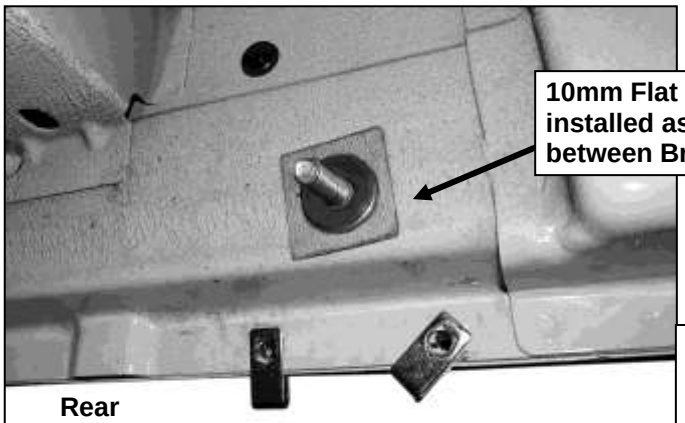

(Fig 17) Rear mounting location pictured

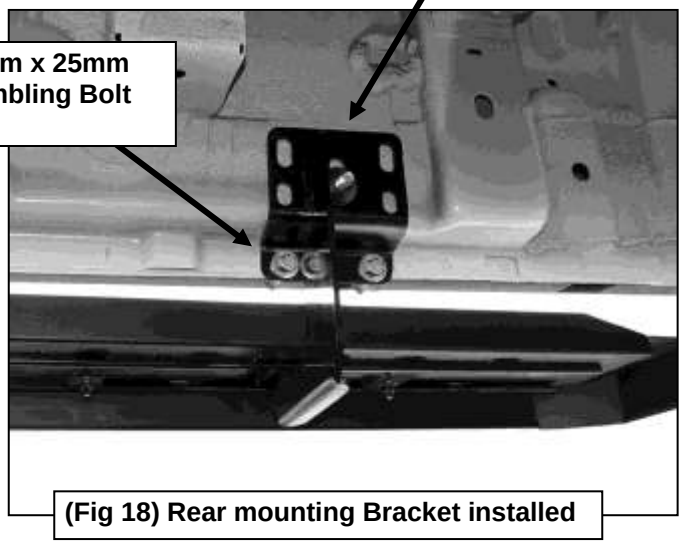

(Fig 18) Rear mounting Bracket installed

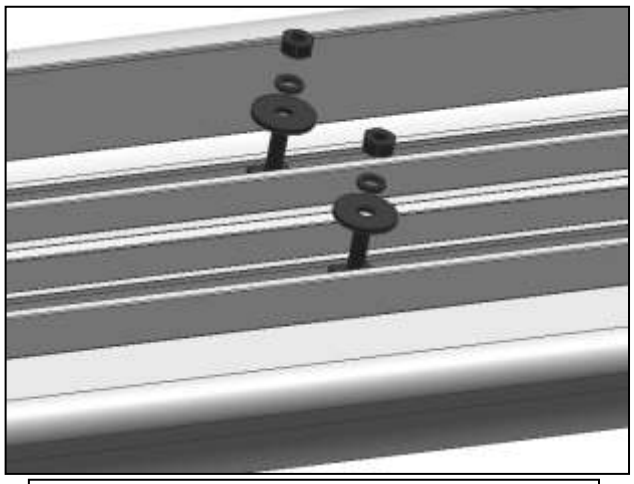

(Fig 19) Insert T-Bolt Plates into tracks on the bottom of the Running Board

(Fig 20) Drop Running Board with T-Bolt Plates down through Brackets

Driver/left Side Installation Pictured

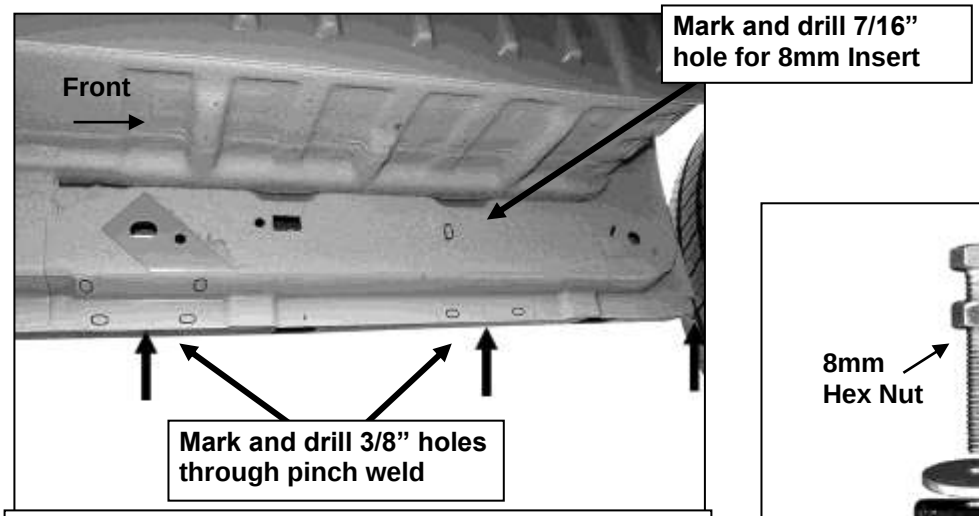

(Fig 21) Driver side front and rear mounting locations

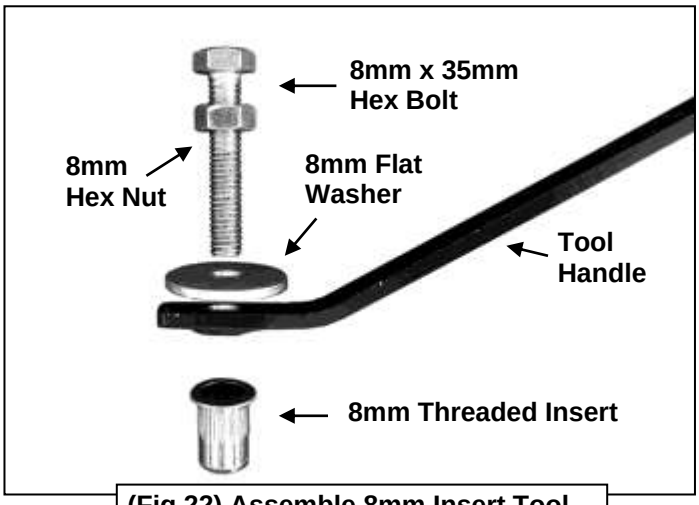

(Fig 22) Assemble 8mm Insert Tool

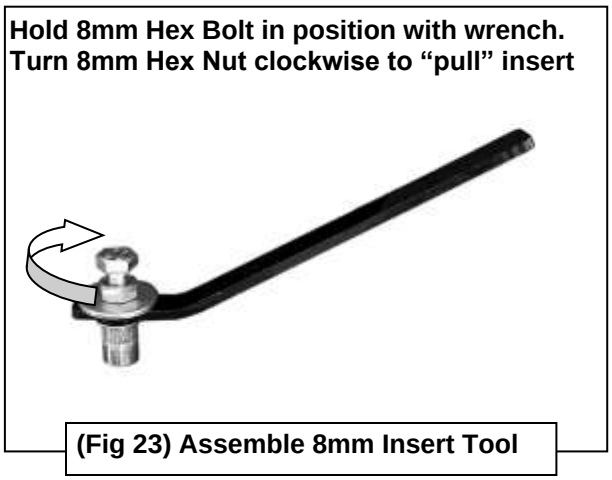

(Fig 23) Assemble 8mm Insert Tool

(Fig 24A) Fully installed Threaded Insert

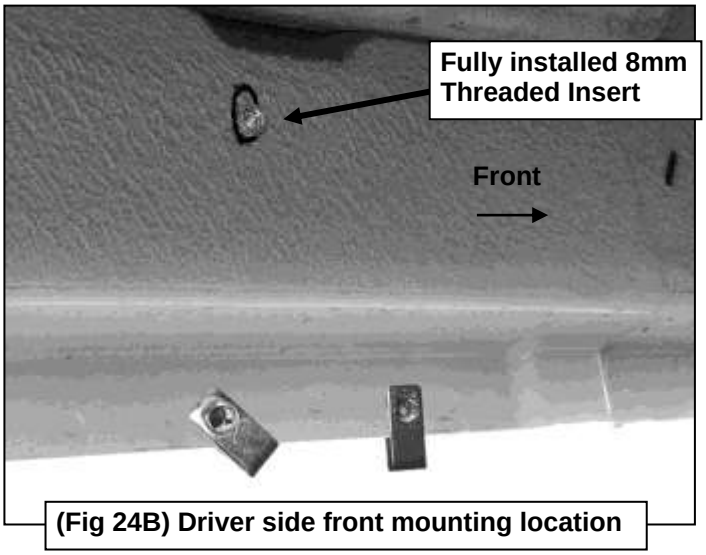

(Fig 24B) Driver side front mounting location

Driver/left Side Installation Pictured

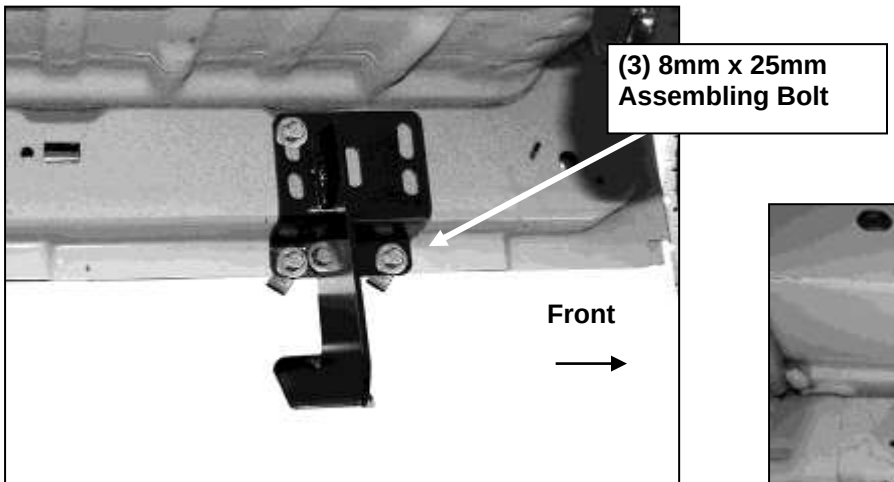

(Fig 25) Driver side front Bracket installed

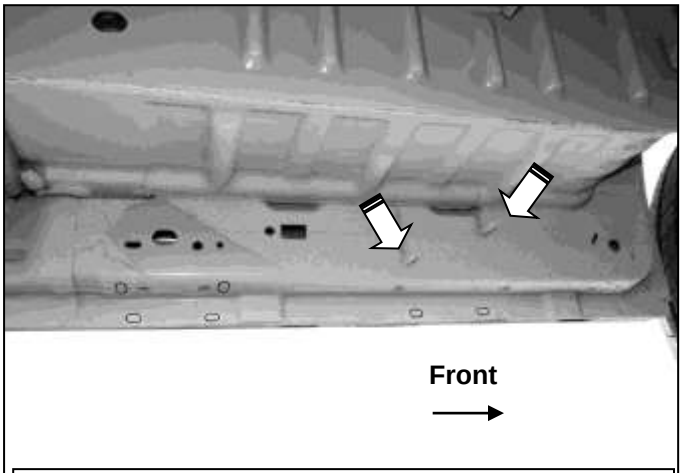

(Fig 26) On some models, the driver/left side front mounting location is equipped with (2) front studs

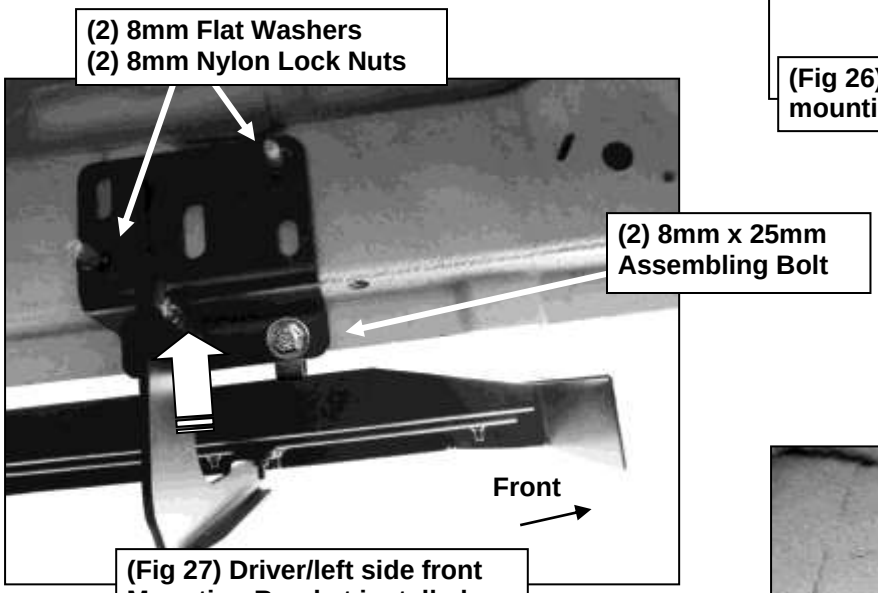

(Fig 27) Driver/left side front Mounting Bracket installed

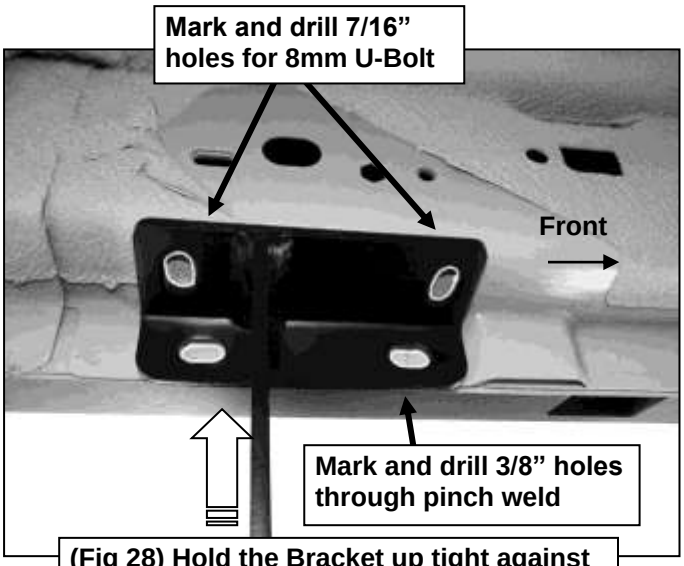

(Fig 28) Hold the Bracket up tight against the bottom of the body panel. Mark the (4) mounting location onto the body panel

Driver/left Side Installation Pictured

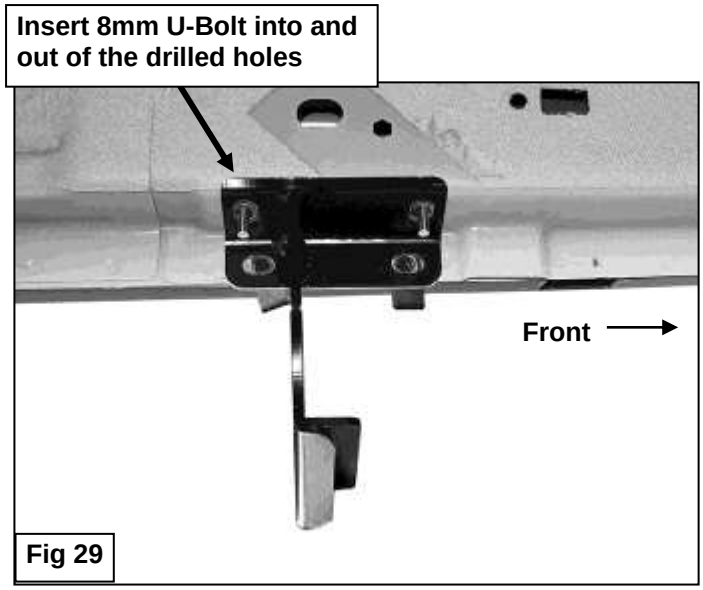

Fig 29

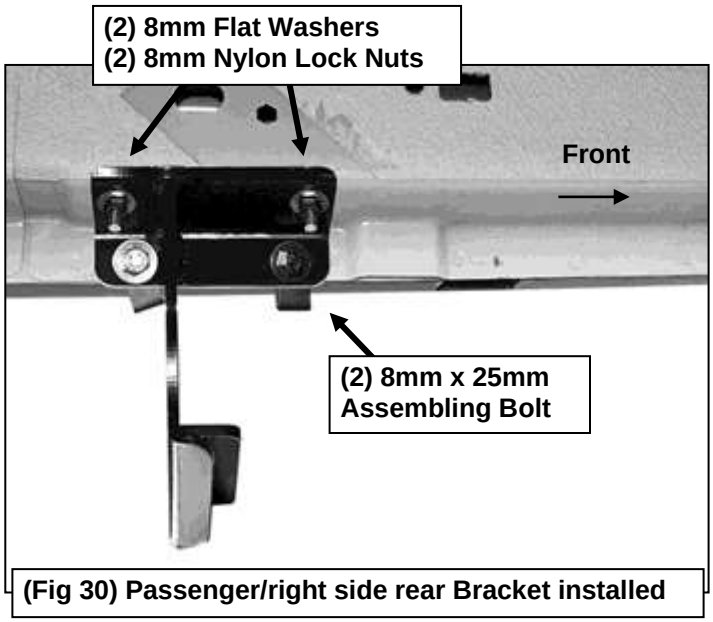

(Fig 30) Passenger/right side rear Bracket installed

Complete Installation