INSTALLATION INSTRUCTIONS

TRANSPORTER RUNNING BOARD FOR 16-17 MERCEDES-BENZ METRIS CARGO VAN

PART # TR-M53596

PARTS LIST:

1	Driver/left Rattler Running Board (Short)	5	10-1.5mm Hex Nuts
1	Passenger/right Rattler Running Board (Long)	5	8-1.25mm x 25mm Hex Bolts
2	Driver/left Side Mounting Brackets	10	8mm x 24mm x 2mm Flat Washers
2	Passenger/right Front and Center Mounting Brackets	5	8mm Lock Washers
1	Passenger/right Rear Mounting Bracket	5	8mm Hex Nuts
3	Driver/Left Support Brackets (also use 1 for passenger/right rear Support Bracket)	14	6mm T-Bolt Plates
2	Passenger/right Front and Center Support Brackets	10	6-1.mm x 25mm Hex Bolts
5	10mm Bolt Plates	34	6mm x 22mm x 2mm Flat Washers
5	10mm Plastic Retainers	24	6mm Lock Washers
5	10mm x 27mm x 3mm Flat Washers	24	6mm Hex Nuts
5	10mm Lock Washers		

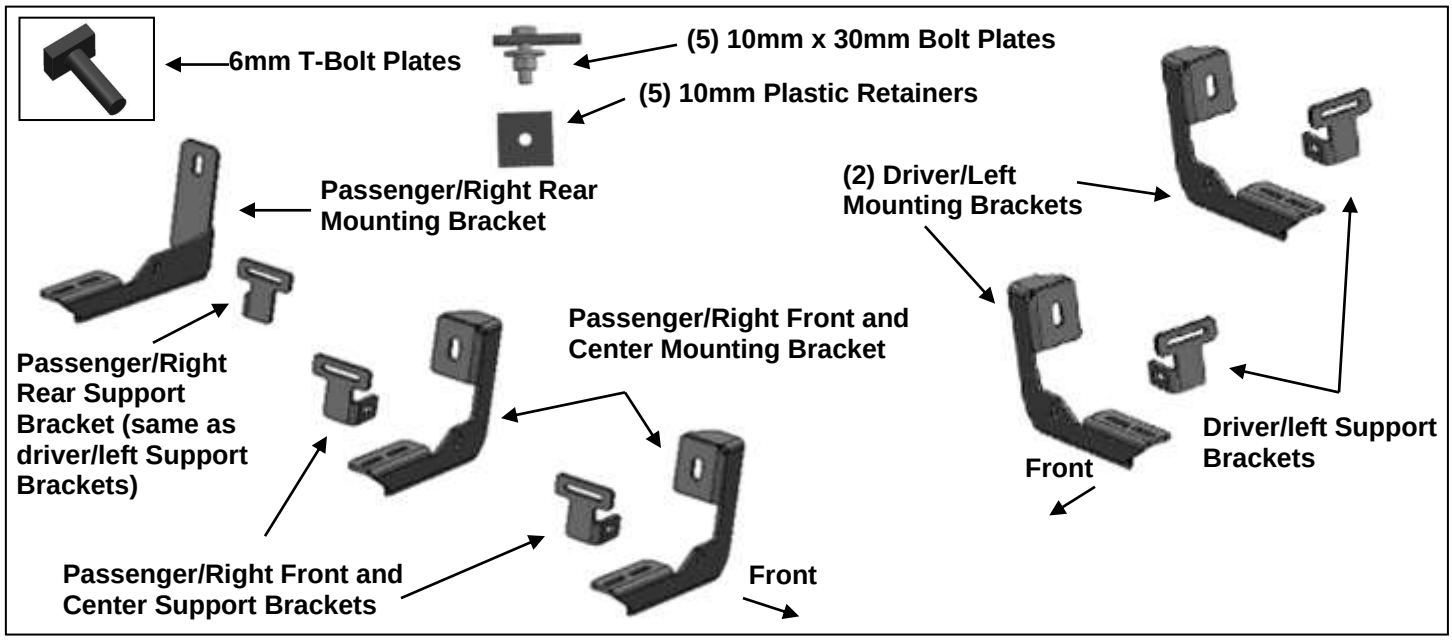

PROCEDURE:

REMOVE CONTENTS FROM BOX. VERIFY ALL PARTS ARE PRESENT. READ INSTRUCTIONS CAREFULLY BEFORE STARTING INSTALLATION. DRILLING IS REQUIRED. ASSISTANCE IS RECOMMENDED.

1. Starting on the passenger/right side of the vehicle, locate the factory hole in the inner body panel closest to the front tire opening, **(Figure 1)**. Remove the rubber plug. **NOTE**: Mounting locations may be covered with heavy undercoating.
2. Select (1) 10mm Bolt Plate and (1) 10mm Plastic Retainer, **(Figure 2)**. Partially thread the Retainer onto the Bolt Plate. Insert Bolt Plate into the hole in the inner body panel, **(Figure 3)**. Once the Bolt Plate is inserted, hold the Bolt end with one hand and tighten the Plastic Retainer with your other hand until it is tight against the body panel. **IMPORTANT:** The Plastic Retainer is designed to prevent the Bolt Plate from falling into the body panel and to aid in Bracket installation.
3. Select (1) Passenger/right Front or Center Mounting Bracket, **(Figure 4)**. Attach the Bracket to the Bolt Plate with (1) 10mm Flat Washer, (1) 10mm Lock Washer and (1) 10mm Hex Nut, **(Figures 5 & 6)**. Do not tighten hardware at this time.
4. Next, select (1) Passenger/right Front and Center Support Bracket. Attach the Support Bracket to the back of the front Mounting Bracket with (1) 8mm x 25mm Hex Bolt, (2) 8mm Flat Washers, (1) 8mm Lock Washer and (1) 8mm Hex Nut, **(Figures 4—6)**. Line up the mounting flange on the Support Bracket with the <u>back</u> of the pinch weld, **(Figure 6)**.
5. Repeat **Steps 2—5** to install the passenger side center Bracket and Support Bracket, **(Figure 14)**.

6. Move along the body to the last mounting hole close to the rear tire opening, **(Figure 7)**. Repeat **Steps 2—5** to install the unique passenger/right rear Mounting Bracket., **(Figures 8 & 9)**
7. Select the long passenger side Running Board. Place the Running Board on top of the (3) Brackets. Select (6) 6mm T-Bolt Plates, **(Figure 10)**. Locate the channels in the bottom of the Running Board, **(Figure 11)**. Insert the Bolt Plates into the channels in the bottom of the Running Board closest to the Brackets. Lift the Running Board up and guide the studs down through the Brackets.
8. Attach the Running Board to the Brackets with (6) 6mm Flat Washers, (6) 6mm Lock Washers and (6) 6mm Hex Nuts, **(Figure 12)**. **NOTE**: The Running Board is designed to fit close to the vehicle. It may be necessary to loosen the Brackets and tilt the Brackets downward to insert the Running Board between the Brackets and the body. Level and adjust the Running Board and fully tighten all hardware.
9. Level and adjust the Running Board and fully tighten the Bracket to vehicle hardware only.
10. Make sure the Brackets are level to the vehicle. Line up the slots on each Support Bracket with the back of the pinch weld. Mark the location of the slots onto the pinch weld, **(Figure 13)**. **IMPORTANT**: Do not drill too close to the bottom edge of the pinch weld. Adjust Support Brackets and/or Mounting Brackets to move slot in support bracket up away from the bottom edge of the pinch weld.
11. Once the Running Board and Brackets are properly adjusted and slot locations marked, remove the Running Board and Support Brackets. Use a 1/4” drill bit to drill the (2) holes through the pinch weld for each Support Bracket, **(Figure 13)**. **NOTE**: Drill holes toward outer ends of slot. Avoid drilling through welds in pinch weld.
12. Attach each Support Bracket to the pinch weld with (2) 6mm Hex Bolts, (4) 6mm Flat Washers, (2) 6mm Lock Washers and (2) 6mm Hex Nuts, **(Figures 14, 15, 18 & 19)**. Repeat this Step to attach all Support Brackets. Tighten the hardware attaching the Support Brackets to the vehicle only.
13. Move to the driver side of the vehicle, **(Figure 16)**. Repeat **Steps 2—5** to install the driver side front and rear Mounting Brackets and Support Brackets, **(Figures 17—19)**. **NOTE**: The Driver side front and rear Brackets are identical.
14. Select the driver/left Running Board. Repeat **Steps 8—13** to drill the pinch weld and to install the Running Board.
15. Check the driver/left Running Board for level then fully tighten all hardware.
16. Do periodic inspections to the installation to make sure that all hardware is secure and tight.

To protect your investment, wax this product after installing. Regular waxing is recommended to add a protective layer over the finish. Do not use any type of polish or wax that may contain abrasives that could damage the finish. Use Mild soap to clean the Running Board.

Passenger Side Installation Pictured

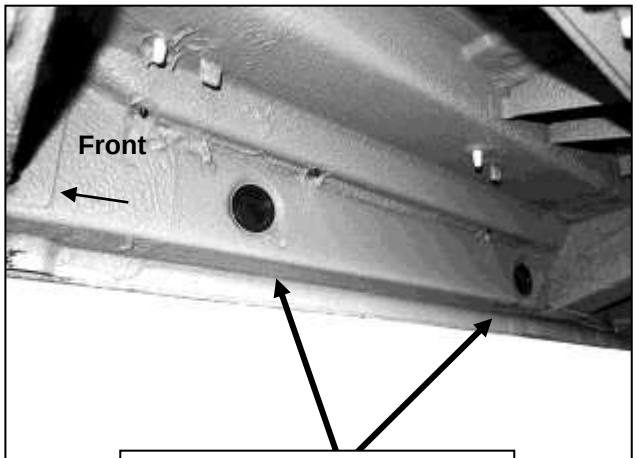

(Fig 1) Remove rubber plugs

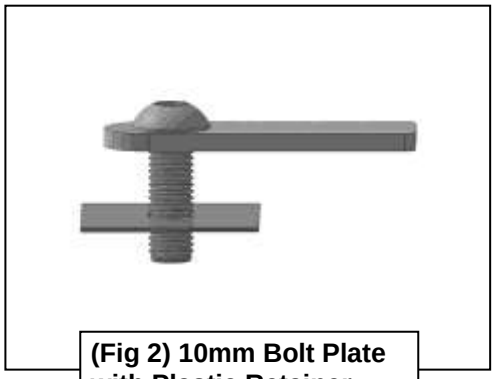

(Fig 2) 10mm Bolt Plate with Plastic Retainer

Passenger Side Installation Pictured

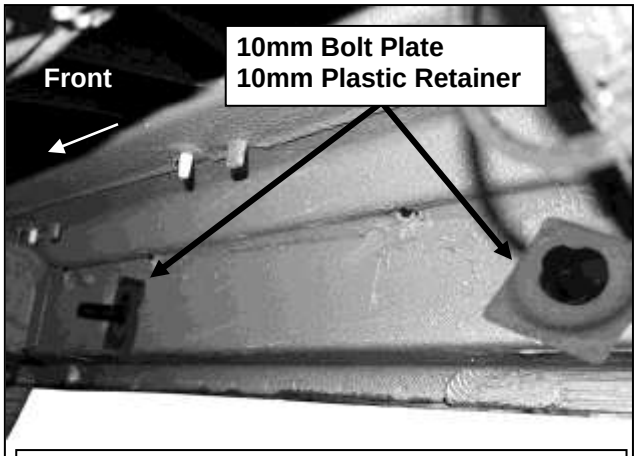

(Fig 3) Insert Bolt Plate into hole in body panel

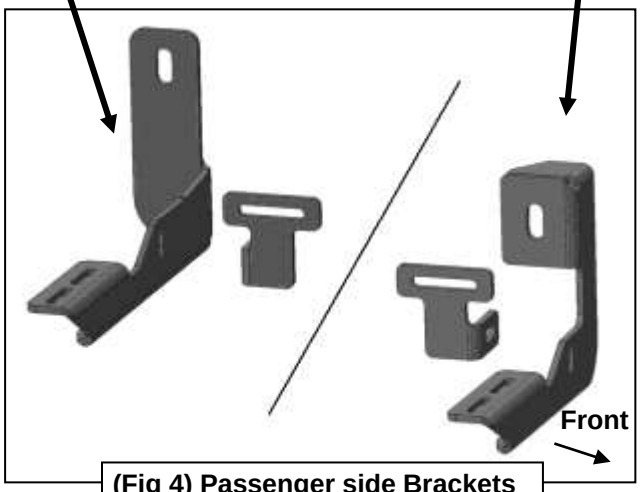

(Fig 4) Passenger side Brackets

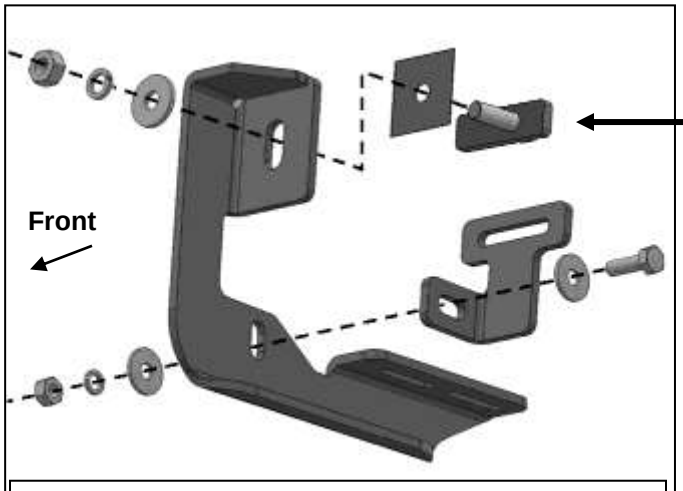

(Fig 5) Passenger/right Front and Center Brackets

(Fig 6) Passenger/right Front Bracket installed

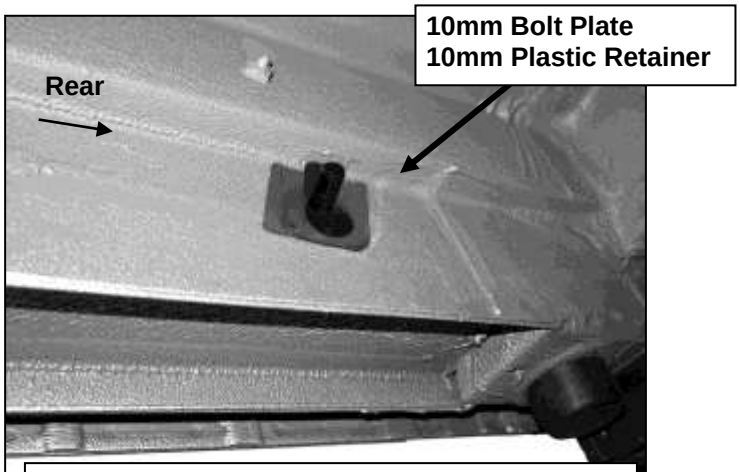

(Fig 7) Passenger/right rear mounting location

Passenger Side Installation Pictured

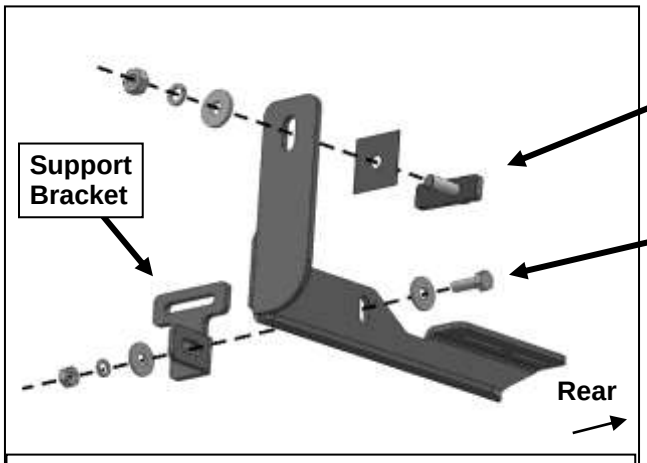

Attach Bracket to Bolt Plate
10mm Flat Washer
10mm Lock Washer
10mm Hex Nut

8mm x 30mm Hex Bolt
(2) 8mm Flat Washers
8mm Lock Washer
8mm Hex Nut

(Fig 8) Passenger/right rear Bracket installation

10mm Flat Washer
10mm Lock Washer
10mm Hex Nut

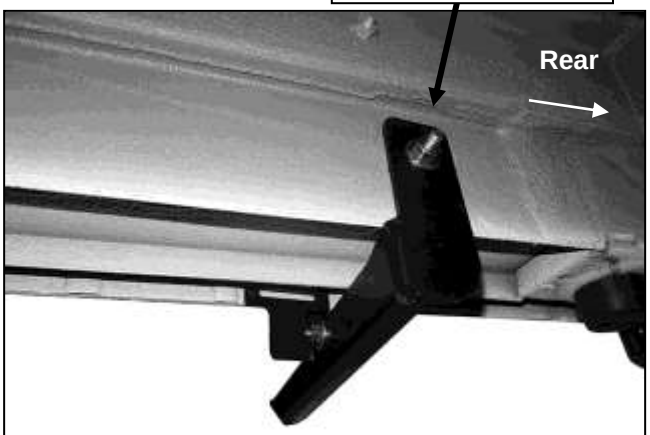

(Fig 9) Passenger/right rear Bracket installed

(Fig 10) 6mm T-Bolt Plates

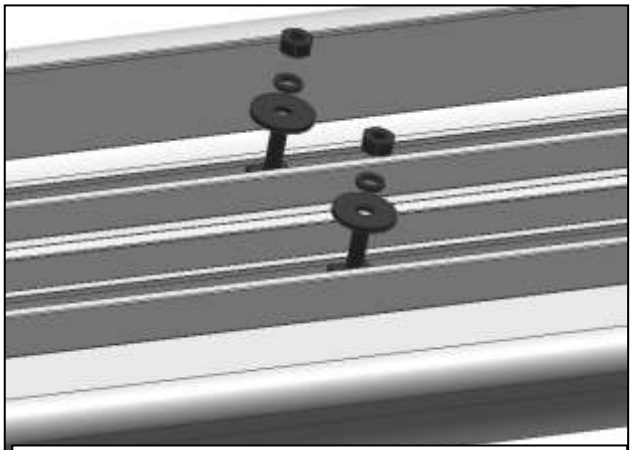

(Fig 11) Insert 6mm T-Bolt Plates into tracks on the bottom of the Running Board

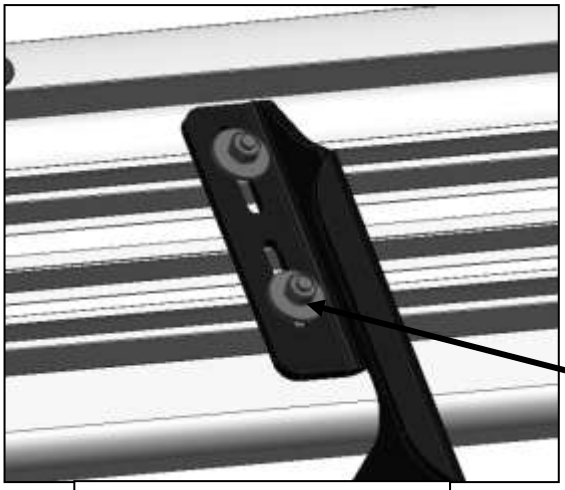

(12) 6mm T-Bolt Plates
(2) 6mm Flat Washers
(2) 6mm Lock Washers
(2) 6mm Hex Nuts

(Fig 12) Attach Bolt Plate in Running Board to Brackets

Passenger Side Installation Pictured

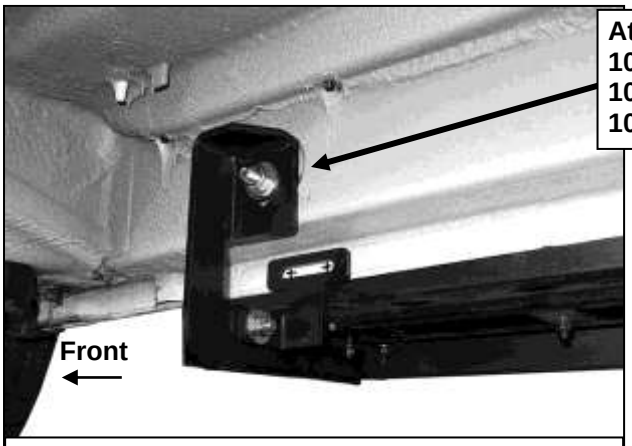

(Fig 13) Mark location of each Support Bracket onto pinch weld before drilling 1/4" holes

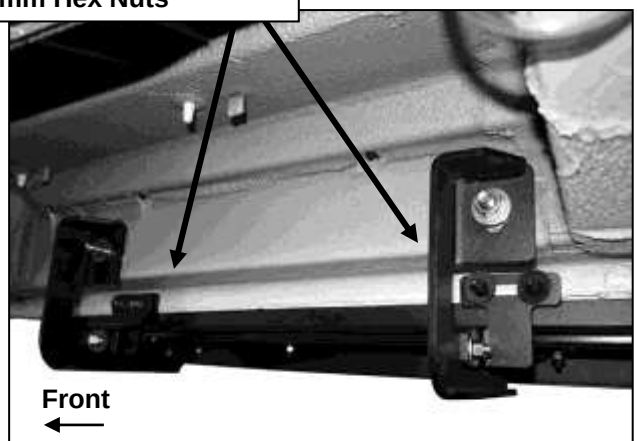

(Fig 14) Attach Support Brackets to pinch weld (front and center Brackets pictured)

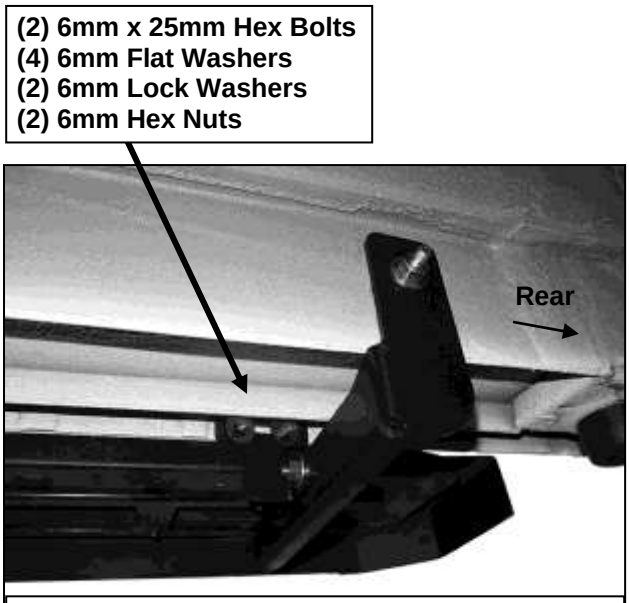

(Fig 15) Attach Support Bracket to pinch weld (passenger/right rear Bracket pictured)

Driver Side Installation Pictured

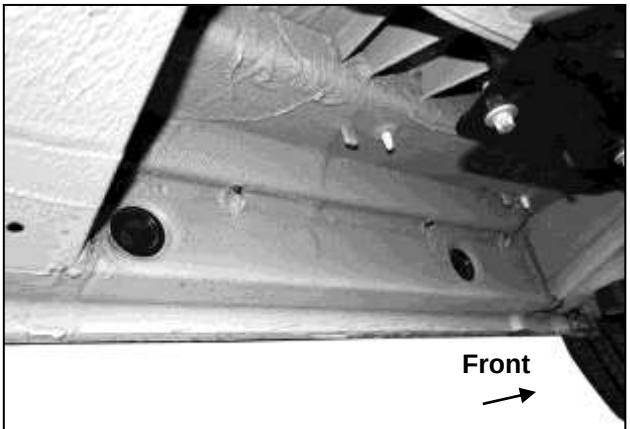

(Fig 16) Remove rubber plugs (driver/left side location pictured)

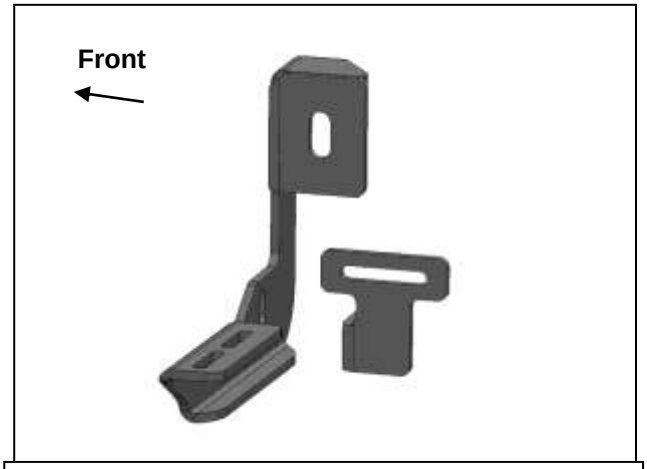

(Fig 17) Driver/left Mounting Bracket and Support Bracket (driver side front and rear Brackets are identical)

(Fig 18) Driver/left Front Brackets installed

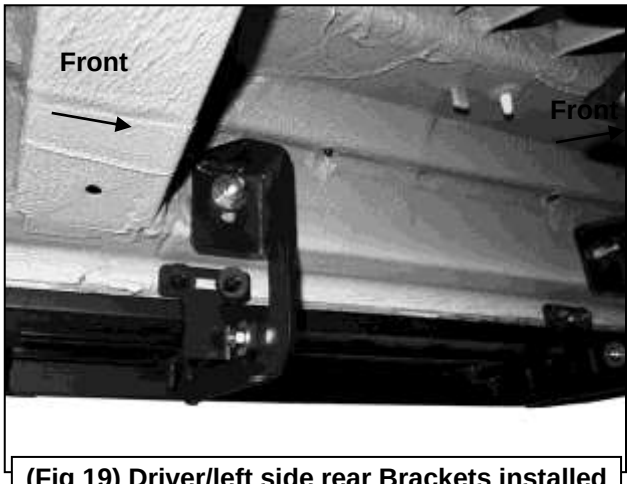

(Fig 19) Driver/left side rear Brackets installed

Complete Installation-