BLACK HORSE OFF ROAD®

TEL：1-866-XANATOS

INSTALLATION INSTRUCTIONS

SIDEBARS

15-24 FORD F150 SUPERCREW CAB /22-24 F150 LIGHTNING

17-24 FORD F250/350/450/550 SUPER DUTY CREW CAB

PART# 9BFRSCBK5OV-BN /9BFRSCSS5OV-BN

PARTS LIST:

1	Driver/left Sidebar	12	8-1.25mm x 25mm Hex Bolts
1	Passenger/right Sidebar	30	8mm x 22mm OD x 2mm Washers
6	Sidebar Brackets (use for left or right)	12	8mm Lock Washers
18	8mm Plastic Washers	18	8-1.25mm Nylon Lock Nuts

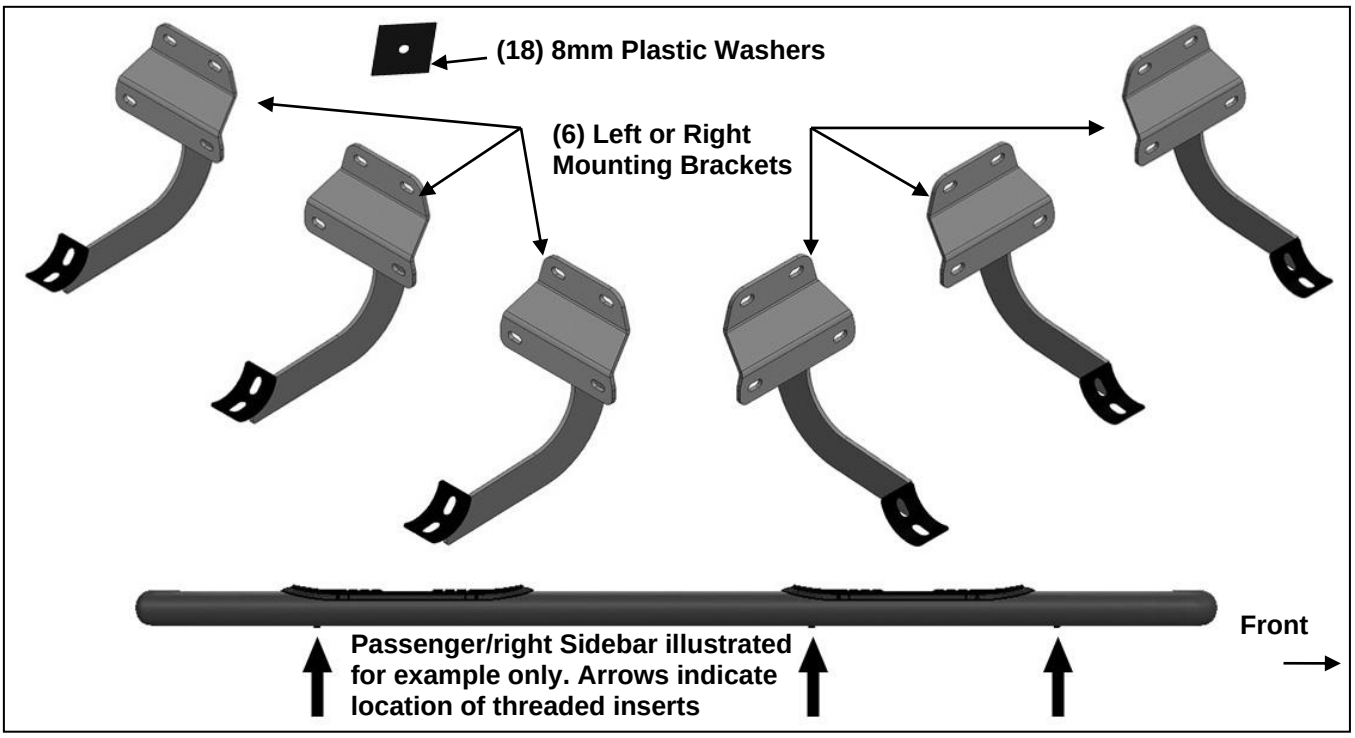

PROCEDURE:

REMOVE CONTENTS FROM BOX. VERIFY ALL PARTS ARE PRESENT. READ INSTRUCTIONS CAREFULLY BEFORE STARTING INSTALLATION. ASSISTANCE IS RECOMMENDED.

1. Start the installation under the passenger side of the vehicle. Locate the front factory running board mounting location along the inner side of the body, **(Figure 1)**. **IMPORTANT: Clean mounting studs with wire brush to remove paint and debris.**
2. Slide (1) Plastic Washer over each factory mounting stud in the body panel, **(Figures 2 & 3)**. **IMPORTANT**: The Plastic Washers are designed to prevent corrosion between the aluminum body panel and the steel mounting brackets. **Do not install the Brackets without the Plastic Washers**.
3. Select (1) Mounting Bracket. **NOTE**: All (6) Brackets are universal and will fit left or right side. Attach the Mounting Bracket to the (3) factory studs with (3) 8mm Flat Washers and (3) 8mm Nylon Lock Nuts, **(Figure 4)**. Snug but do not fully tighten the hardware.
4. Repeat **Steps 1—3** to install the (2) remaining center and rear passenger side Brackets.
5. Select the passenger/right Sidebar. Carefully position the Sidebar onto the (3) Mounting Brackets. **IMPORTANT**: Do not slide, (front to back or rotate), the Sidebar on the Brackets or damage to the finish on the Sidebar may result. Attach the Sidebar to the Mounting Brackets with (6) 8mm x 25mm Hex Bolts, (6) 8mm Lock Washers and (6) 8mm Flat Washers, **(Figure 5)**. Do not tighten hardware.
6. Level and adjust the Sidebar and tighten all hardware.
7. Repeat **Steps 1—6** to install the driver/left Sidebar.
8. Do periodic inspections to the installation to make sure that all hardware is secure and tight.

To protect your investment, wax this product after installing. Regular waxing is recommended to add a protective layer over the finish. Do not use any type of polish or wax that may contain abrasives that could damage the finish.
For stainless steel: Aluminum polish may be used to polish small scratches and scuffs on the finish. Mild soap may be used also to clean the Sidebar.
For gloss black finishes: Mild soap may be used to clean the Sidebar.

Passenger/right Side Installation Pictured

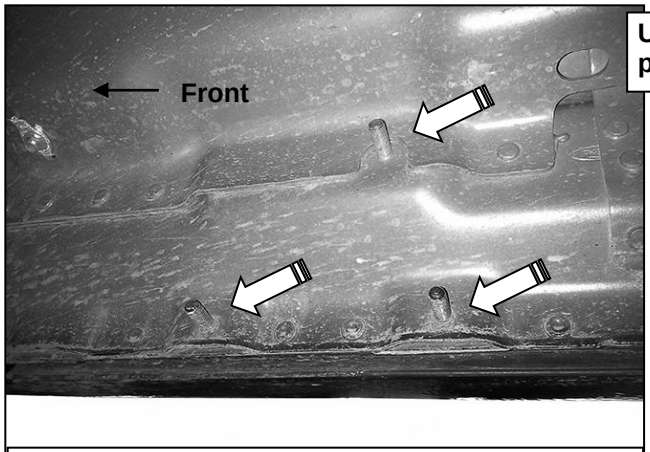

Use a wire brush to remove paint from threads

(Fig 1) Passenger side front mounting location

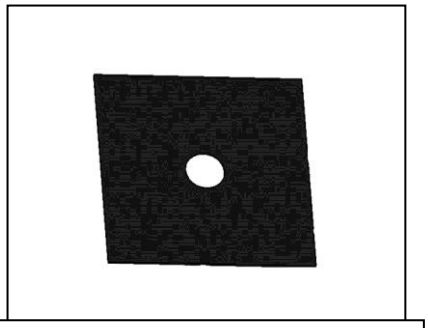

(Fig 2) Plastic Insulation Washer

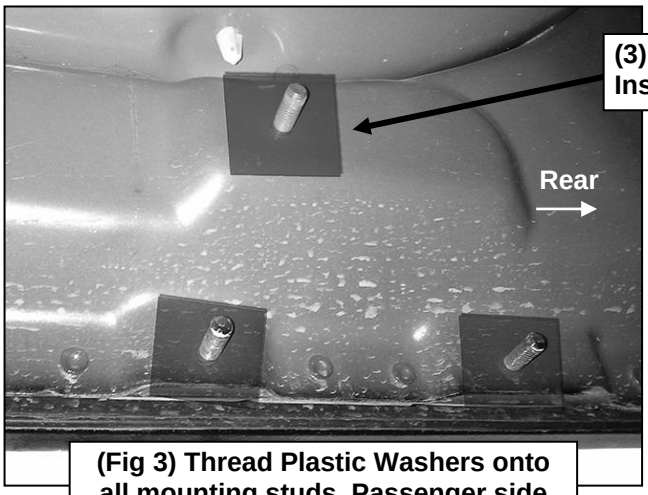

(3) Plastic Insulation Washers

(Fig 3) Thread Plastic Washers onto all mounting studs. Passenger side rear mounting location pictured

(3) 8mm Plastic Washers
(3) 8mm Flat Washers
(3) 8mm Nylon Lock Nuts

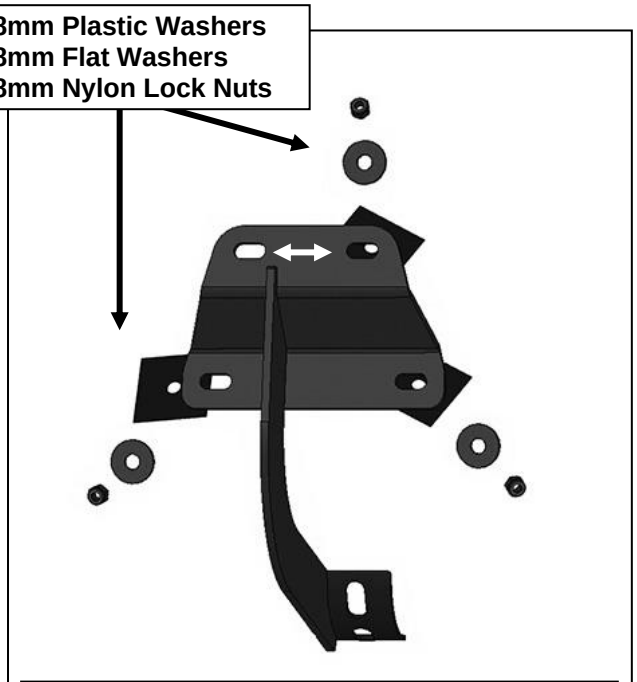

(Fig 4) Typical Bracket installation illustrated

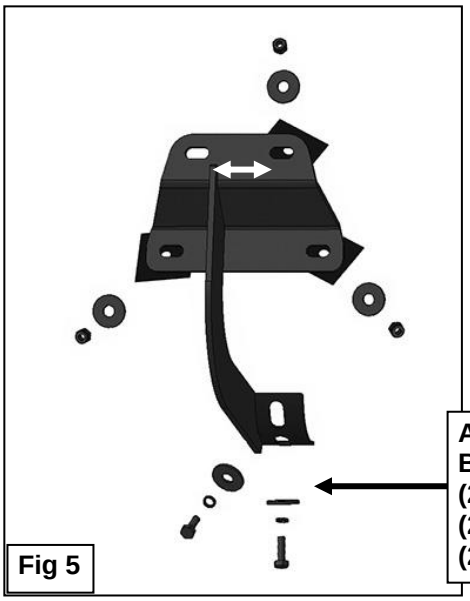

Fig 5

Attach Sidebar to each Bracket with:
(2) 8mm x 25mm Hex Bolts
(2) 8mm Lock Washers
(2) 8mm Flat Washers