BLACK HORSE OFF ROAD®

TEL：1-866-XANATOS

INSTALLATION INSTRUCTIONS

3" SIDE BAR
17-24 HONDA RIDGELINE
PART#9H2010A/9H2010SS

PARTS LIST:

1	Driver/Left Sidebar	1	Driver/Left Rear Mounting Bracket
1	Passenger/Right Sidebar	1	Passenger/Right Rear Mounting Bracket
1	Driver/Left Front Mounting Bracket	12	8mm x 25mm Hex Bolts
1	Passenger/Right Front Mounting Bracket	12	8mm x 24mm x 2mm Flat Washers
1	Driver/Left Center Mounting Bracket	12	8mm Lock Washers
1	Passenger/Right Center Mounting Bracket	12	8mm Combo Hex Bolts w-washers

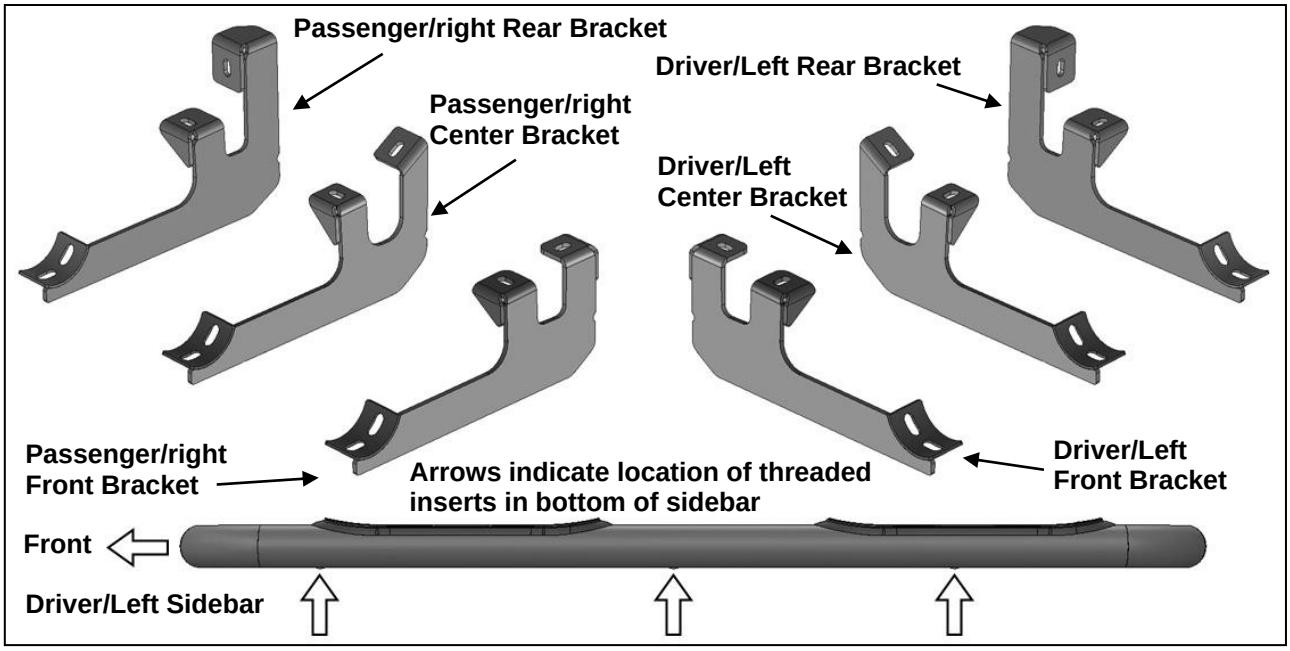

PROCEDURE:

1. **REMOVE CONTENTS FROM BOX. VERIFY ALL PARTS ARE PRESENT. READ INSTRUCTIONS CAREFULLY BEFORE STARTING INSTALLATION.**
2. Starting on the driver/left front of the vehicle, locate the two factory 8mm threaded holes located in the bottom of the floor panel, **(Figure 1)**. **NOTE**: Brackets install in the factory running board mounting locations. Threaded holes may be covered with insulation.
3. Select the driver/left Front Bracket, **(Figure 2)**. Attach the Bracket to the threaded holes with (2) 8mm x 25mm Hex Bolts, (2) 8mm Lock Washers and (2) 8mm Flat Washers, **(Figures 2, 6 & 8)**. Snug but do not tighten hardware at this time.
4. Move to the center of the vehicle. Locate the two threaded holes in the bottom of the floor panel and body support, **(Figure 1)**. Repeat **Steps 2 & 3** to attach driver/left Center Bracket, **(Figures 3 & 8)**.
5. Next, move to the rear of the vehicle. Locate the holes in the bottom and inner side of the floor panel, **(Figure 4)**. Repeat **Steps 2 & 3** to install the driver/left Rear Bracket, **(Figures 5, 7 & 8)**.
6. Carefully position the driver/left Sidebar onto the Brackets. **IMPORTANT**: Do not slide, (front to back or rotate), the Sidebar on the Brackets or damage to the finish may result. Attach the Sidebar to the Brackets with the included (6) 8mm x 25mm Combination Hex Bolts, (**Figures 6—8**). Do not tighten hardware at this time.
7. Align the Sidebar properly and tighten all hardware.
8. Repeat **Steps 2—7** for the passenger/right Sidebar installation.
9. Do periodic inspections to the installation to make sure that all hardware is secure and tight.

To protect your investment, wax this product after installing. Regular waxing is recommended to add a protective layer over the finish. Do not use any type of polish or wax that may contain abrasives that could damage the finish. **For stainless steel**: Aluminum polish may be used to polish small scratches and scuffs on the finish. Mild soap may be used also to clean the Sidebars. **For gloss black finishes**: Mild soap may be used to clean Sidebars.

Driver/left Side Installation Pictured

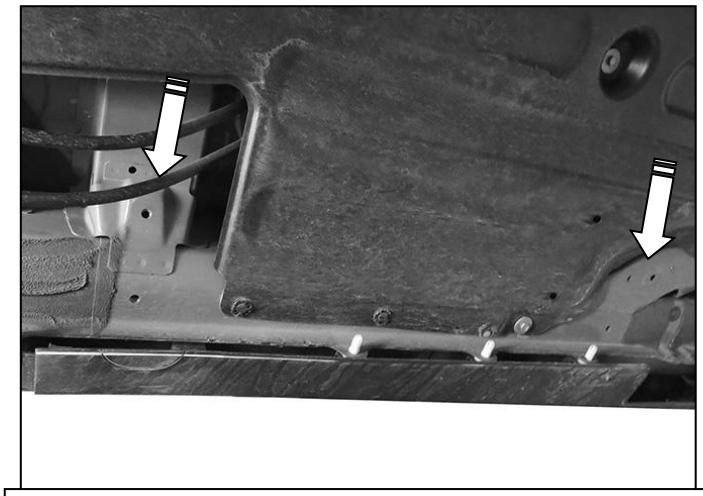

(Fig 1) Driver/left front and center mounting locations

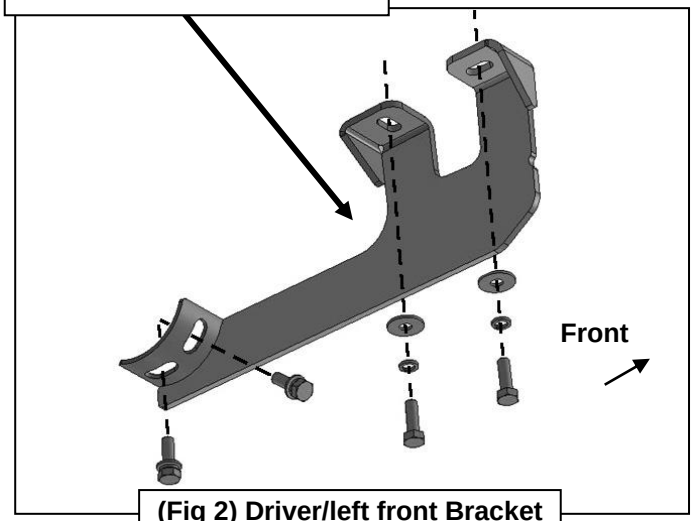

(Fig 2) Driver/left front Bracket

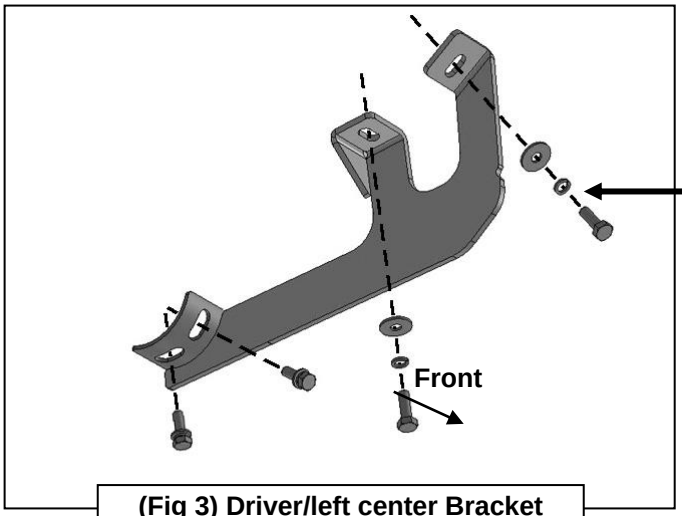

(Fig 3) Driver/left center Bracket

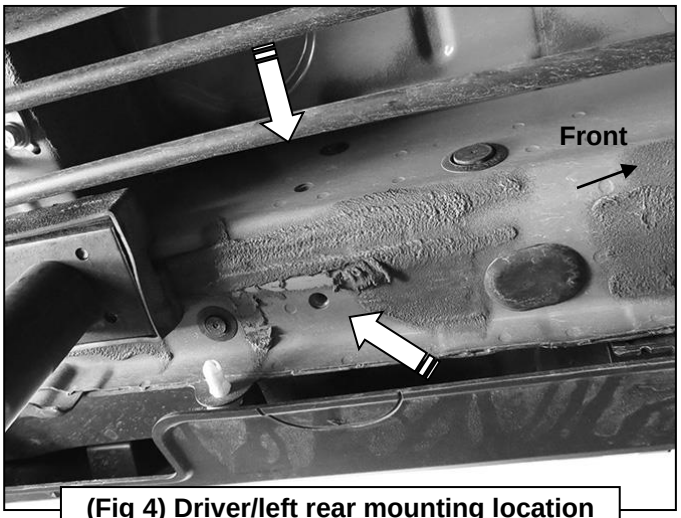

(Fig 4) Driver/left rear mounting location

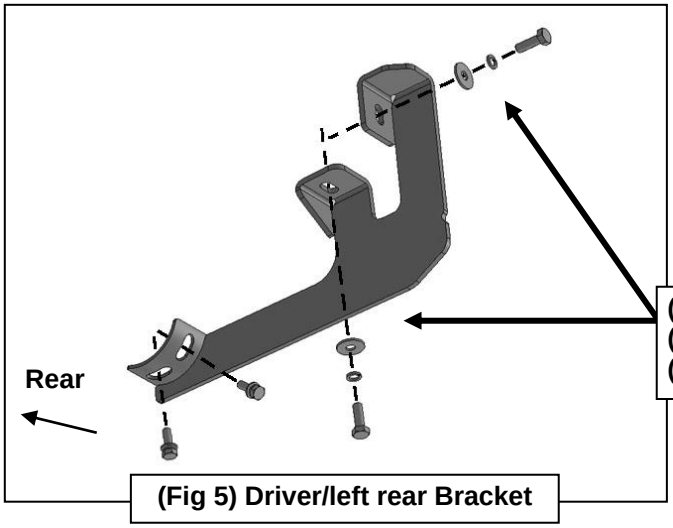

(Fig 5) Driver/left rear Bracket

Driver/left Side Installation Pictured

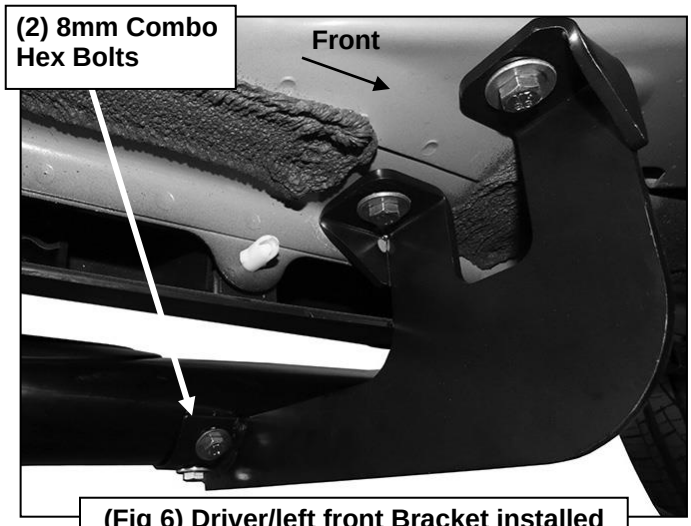

(Fig 6) Driver/left front Bracket installed

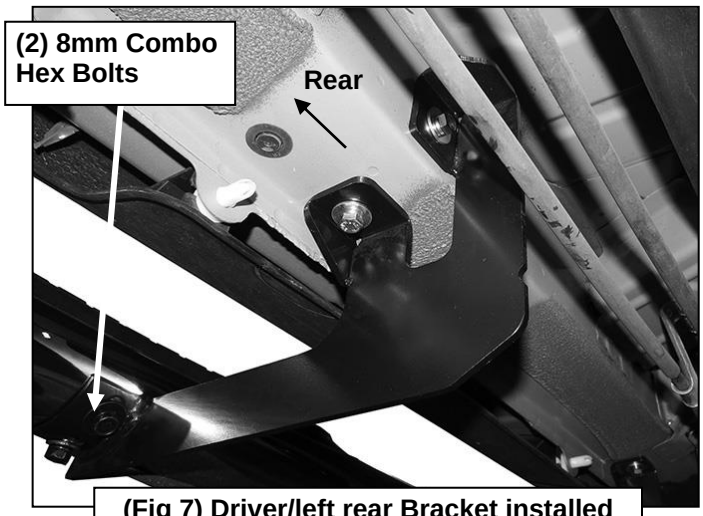

(Fig 7) Driver/left rear Bracket installed

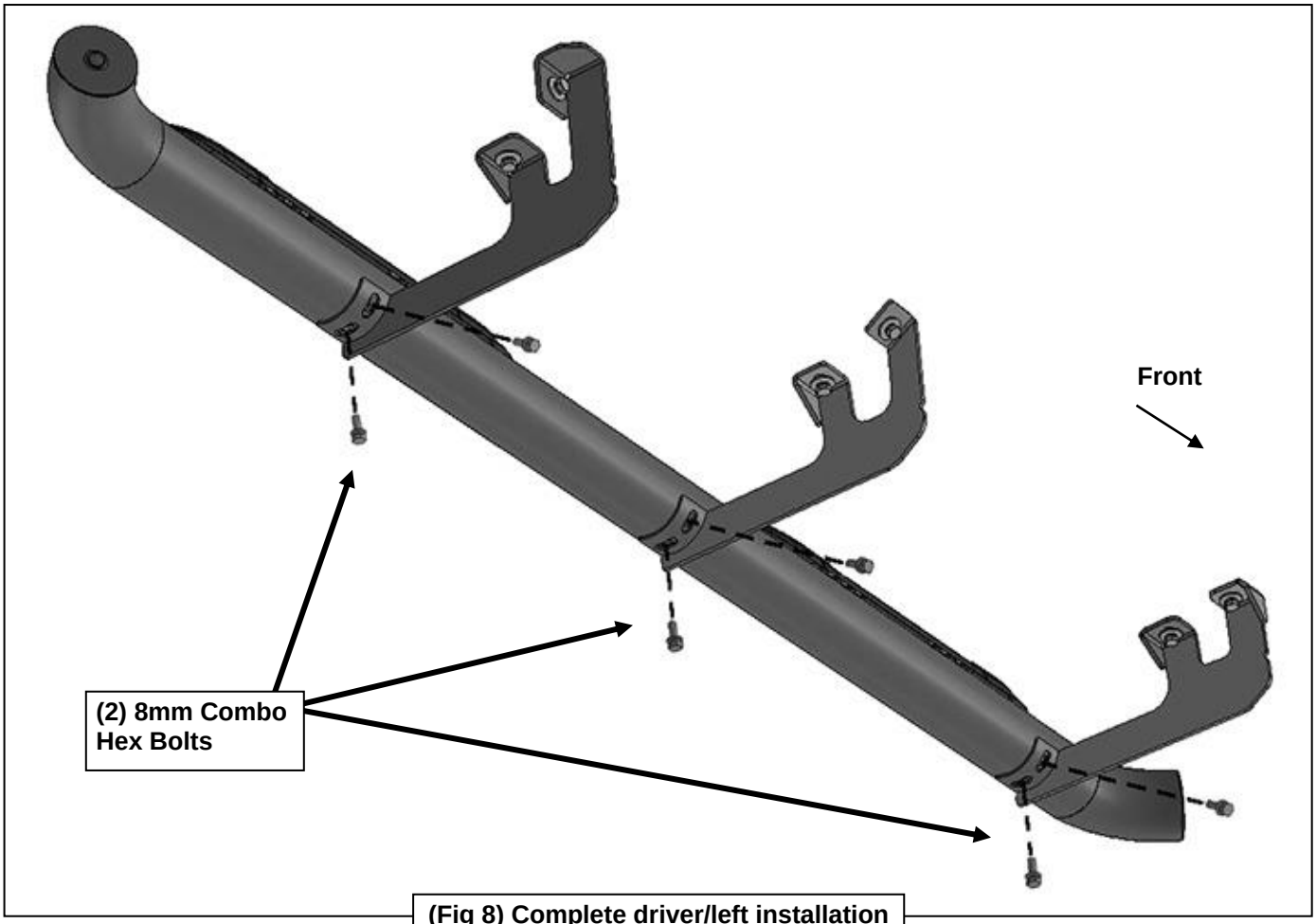

(Fig 8) Complete driver/left installation