BLACK HORSE OFF ROAD®

TEL：1-866-XANATOS

INSTALLATION INSTRUCTIONS

3” SIDEBAR
15-24 JEEP RENEGADE
PART #9JPREA

PARTS LIST:

1	Driver/left Sidebar	4	10mm Lock Washers
1	Passenger/right Sidebar	4	10-1.5mm Hex Nuts
1	Driver/left Front Mounting Bracket	8	8-1.25mm x 25mm Combination Bolts
1	Passenger/right Front Mounting Bracket	4	8-1.25mm x 25mm Hex Bolts
1	Driver/left Rear Mounting Bracket	8	8mm x 24mm x 2mm Flat Washers
1	Passenger/right Rear Mounting Bracket	4	8mm Lock Washers
2	Driver/left Front, Passenger/right Rear Support Brackets	4	8mm Hex Nuts
2	Passenger/right Front, Driver/left Rear Support Brackets	8	6-1.mm x 25mm Hex Bolts
2	10mm x 40mm Long Bolt Plates (rear use)	16	6mm x 22mm x 2mm Flat Washers
2	10mm x 30mm Bolt Plates (front use)	8	6mm Lock Washers
4	10mm x 30mm x 2.5mm Flat Washers	8	6mm Hex Nuts

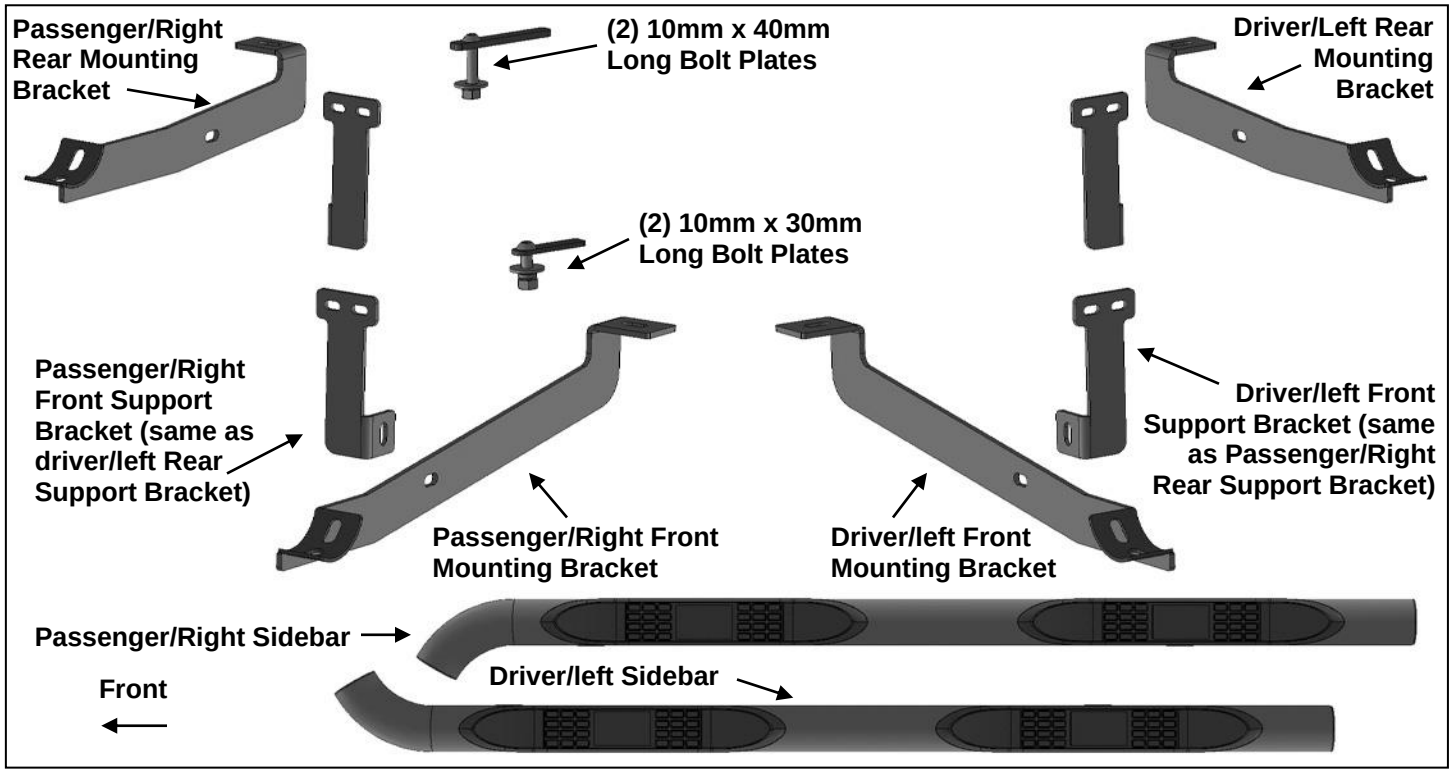

PROCEDURE:

REMOVE CONTENTS FROM BOX. VERIFY ALL PARTS ARE PRESENT. READ INSTRUCTIONS CAREFULLY BEFORE STARTING INSTALLATION. DRILLING IS REQUIRED. CUTTING IS REQUIRED. ASSISTANCE IS RECOMMENDED.

1. Starting on the passenger/right side of the vehicle, locate the factory rubber plug in the bottom of the frame channel, **(Figure 1)**. **NOTE**: Front mounting location is at the front of the plastic cover. Mounting locations may be covered with heavy undercoating, remove coating as necessary.
2. Remove the long plastic cover from the bottom of the floor panel, **(Figure 2)**. Pay close attention to the location and type of factory fasteners for reinstallation.
3. Select (1) 10mm Bolt Plate, **(Figure 3)**. Insert Bolt Plate into the hole in the frame channel, **(Figure 5)**.
4. Select the long Passenger/right Front Bracket, **(Figure 3)**. Attach the Bracket to the Bolt Plate with (1) 10mm Flat Washer, (1) 10mm Lock Washer and (1) 10mm Hex Nut. Leave hardware loose.
5. Next, select (1) Passenger/right Front Support Bracket, **(Figure 4)**. Attach the Support Bracket to the back of the front Mounting Bracket with (1) 8mm x 25mm Hex Bolt, (2) 8mm Flat Washers, (1) 8mm Lock Washer and (1) 8mm Hex Nut, **(Figures 4 & 5)**. Line up the mounting flange on the Support Bracket with the <u>back</u> of the pinch weld, **(Figure 5)**.

6. Move toward the rear of the vehicle. Locate the square plug in the bottom of the frame channel, **(Figure 6)**. Repeat **Steps 2—5** to install the passenger side rear Bracket and Support Bracket, **(Figures 7—9)**. **NOTE**: The passenger side rear Support Bracket will attach to the front of the rear Bracket.
7. Select the passenger/right Sidebar. Place the Sidebar on top of the Brackets. Attach the Sidebar to the Brackets with (4) 8mm Combo Bolts, **(Figures 5 & 9)**.
8. Level and adjust the Running Board and fully tighten all Bracket to Bolt Plate hardware only.
9. Make sure the Sidebar is level to the vehicle. Line up the Support Brackets with the back of the pinch weld, **(Figures 10 & 11)**. If necessary, use clamps to temporarily attach the Support Brackets to the pinch weld. Mark the location of the slots onto the pinch weld.
10. Once the Sidebar and Brackets are adjusted and slot locations marked, temporarily remove the Sidebar and Support Brackets for more room. Use a 1/4” drill bit to drill the (2) holes through the pinch weld for each Support Bracket, **(Figures 12—15)**. **NOTE**: Avoid drilling through welds in pinch weld. **IMPORTANT**: Do not drill too close to the bottom edge of the pinch weld. Adjust Support Brackets and/or Mounting Brackets to move top of Support Bracket up from the bottom edge of the pinch weld.
11. Release the clips attaching the bottom of the outer plastic rocker panel cover to the pinch weld. Attach each Support Bracket to the pinch weld with (2) 6mm Hex Bolts, (4) 6mm Flat Washers, (2) 6mm Lock Washers and (2) 6mm Hex Nuts, **(Figures 12—15)**. Repeat to attach all Support Brackets. Tighten the hardware attaching the Support Brackets to the vehicle only. Reattach the rocker panel cover.
12. Hold the plastic cover up in position and trace the location of the Brackets onto the cover. **NOTE**: Front of cover will require trimming, **(Figures 16 & 17)**. Slot must be cut from cover to clear rear Mounting Bracket. Cut as little from the cover as possible. Do not cut mounting points off of cover if possible.
13. Reinstall the cover, the Brackets and the Sidebar.
14. Align and adjust Sidebar properly and fully tighten all hardware.
15. Repeat **Steps 2—14** to install the driver/left Sidebar.
16. Do periodic inspections to the installation to make sure that all hardware is secure and tight.

To protect your investment, wax this product after installing. Regular waxing is recommended to add a protective layer over the finish. Do not use any type of polish or wax that may contain abrasives that could damage the finish.
For stainless steel: Aluminum polish may be used to polish small scratches and scuffs on the finish. Mild soap may be used also to clean the Sidebar.
For gloss black finishes: Mild soap may be used to clean the Sidebar.

Passenger Side Installation Pictured

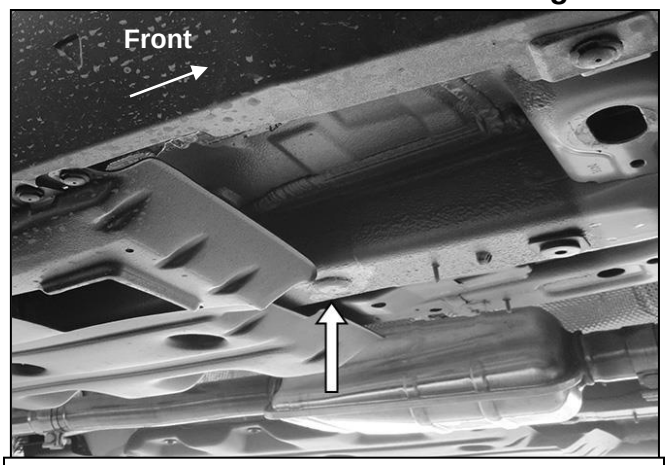

(Fig 1) Passenger side front, Remove plug (arrow)

(Fig 2) Remove plastic cover

Passenger Side Installation Pictured

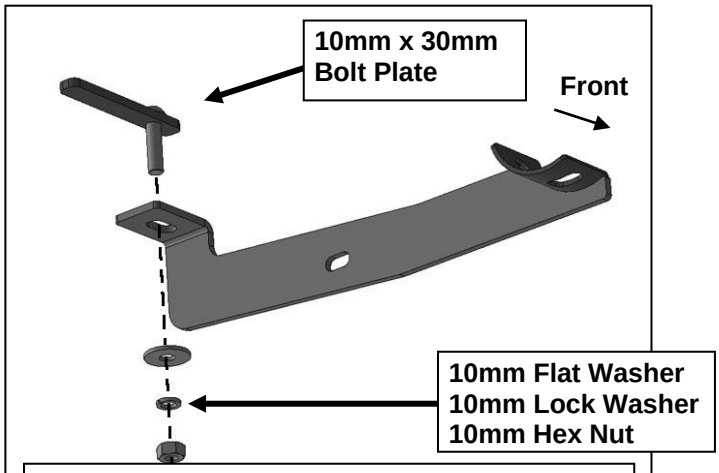

(Fig 3) Insert Bolt Plate into hole in body panel

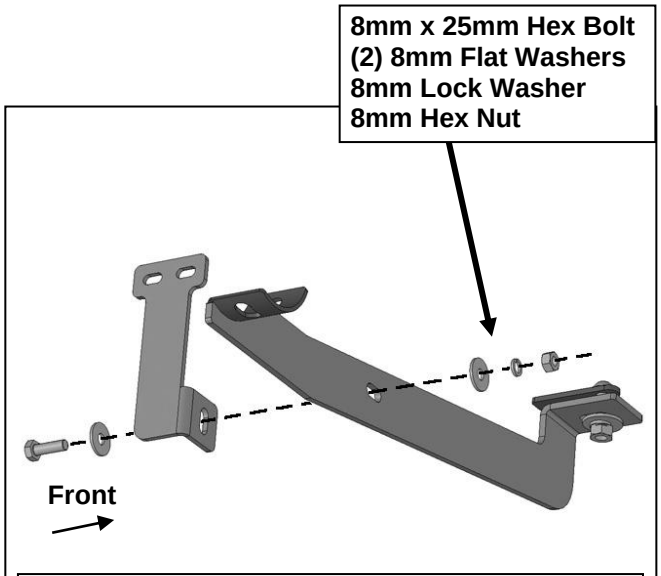

(Fig 4) Attach Support Bracket to back Bracket

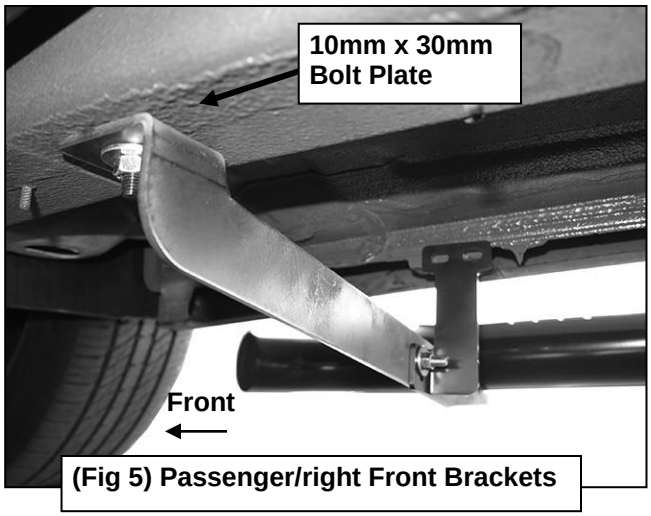

(Fig 5) Passenger/right Front Brackets

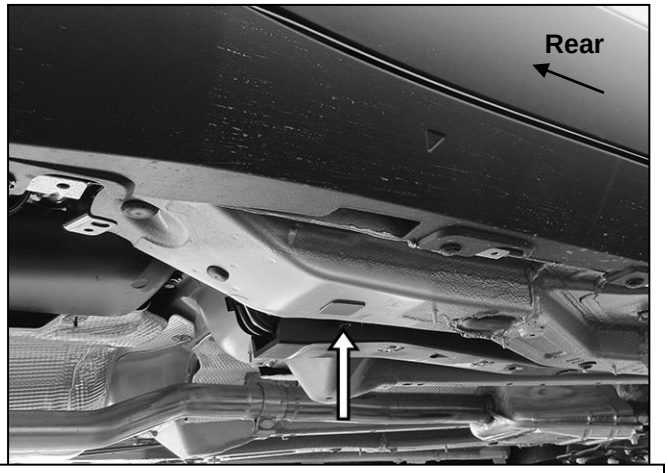

(Fig 6) Remove plug from passenger rear mounting location (arrow) and insert 10mm x 40mm Long Bolt Plate (Fig 7)

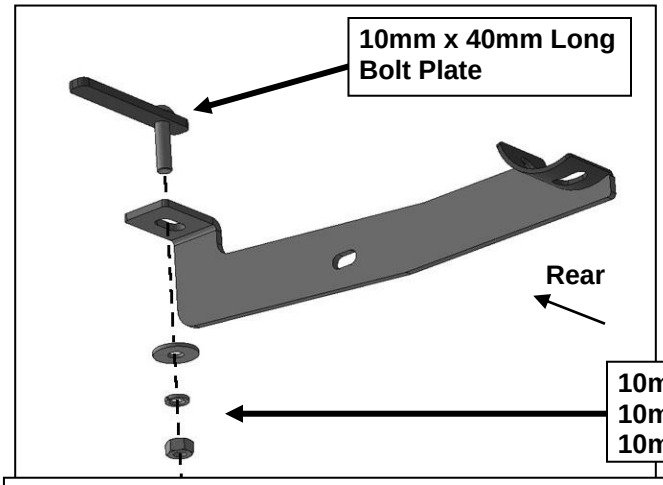

(Fig 7) Passenger/right rear Bracket to Bolt Plate

Passenger Side Installation Pictured

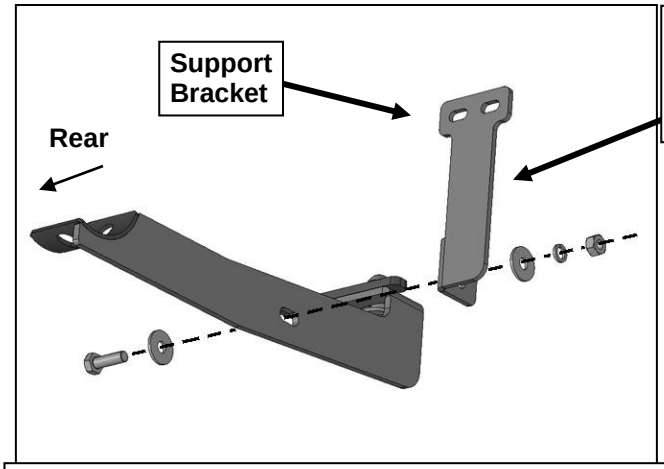

8mm x 25mm Hex Bolt
(2) 8mm Flat Washers
8mm Lock Washer
8mm Hex Nut

(Fig 8) Attach Support Bracket to front of Bracket

Attach Bracket to Bolt Plate
10mm Flat Washer
10mm Lock Washer
10mm Hex Nut

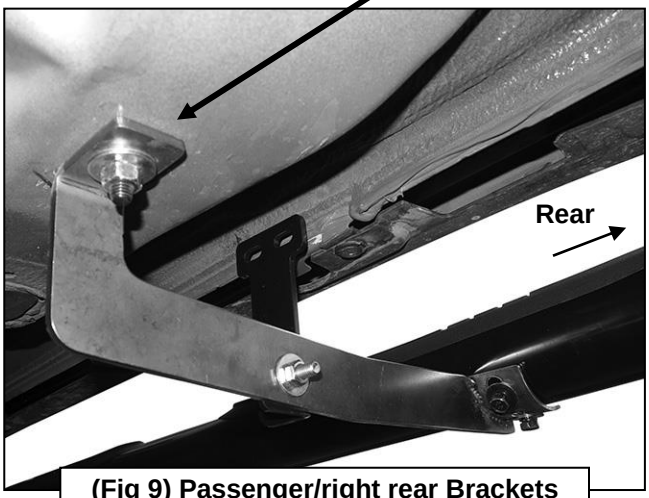

(Fig 9) Passenger/right rear Brackets

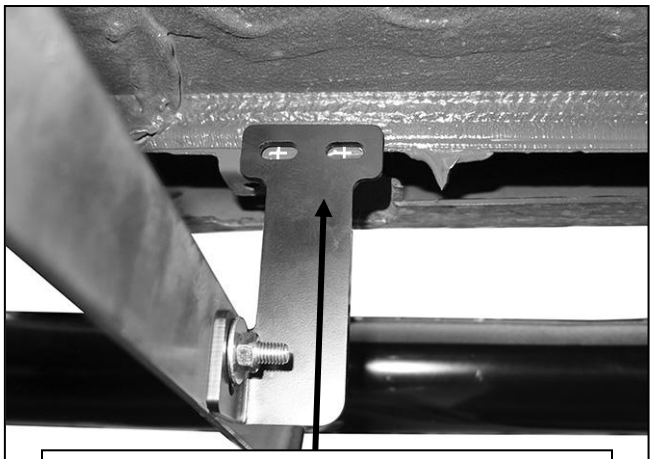

(Fig 10) Mark back of pinch weld to drill for Support Bracket (Passenger front Support)

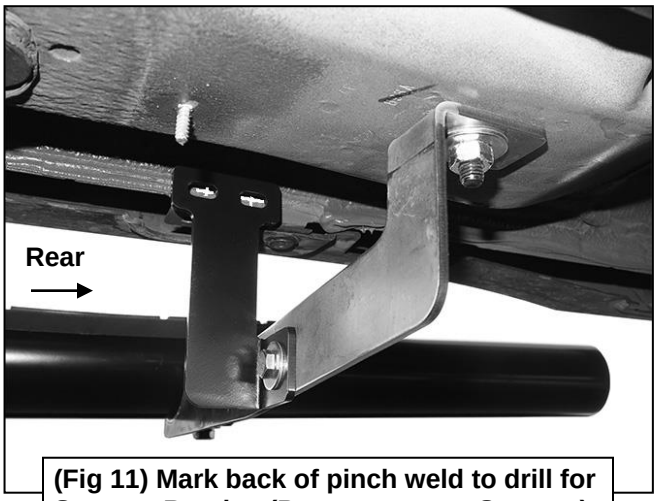

(Fig 11) Mark back of pinch weld to drill for Support Bracket (Passenger rear Support)

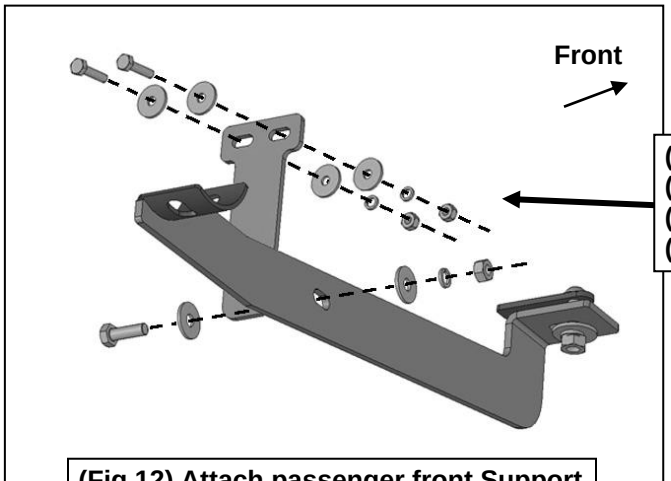

(2) 6mm x 25mm Hex Bolts
(4) 6mm Flat Washers
(2) 6mm Lock Washers
(2) 6mm Hex Nuts

(Fig 12) Attach passenger front Support Bracket to back of pinch weld.

Adjust and level Sidebar before drilling pinch weld for Support Brackets. With Sidebars level, mark locations and remove Sidebars for clearance. Carefully drill 1/4” holes through pinch weld. **IMPORTANT**: Do not drill too close to bottom edge of pinch weld. Adjust Support Bracket up as far as possible.

Passenger Side Installation Pictured

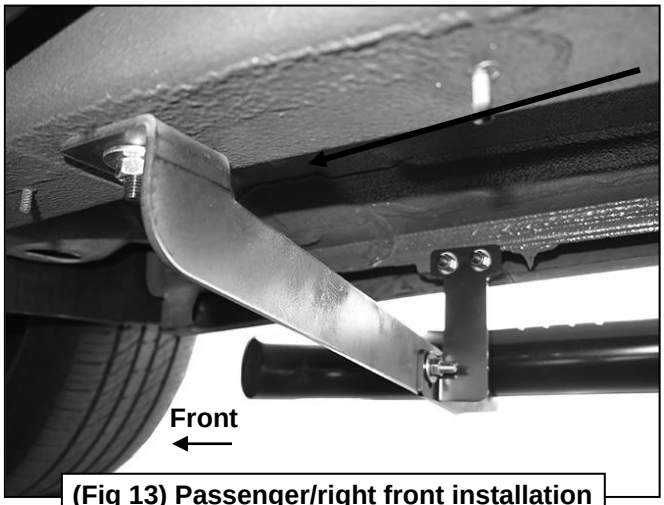

(Fig 13) Passenger/right front installation

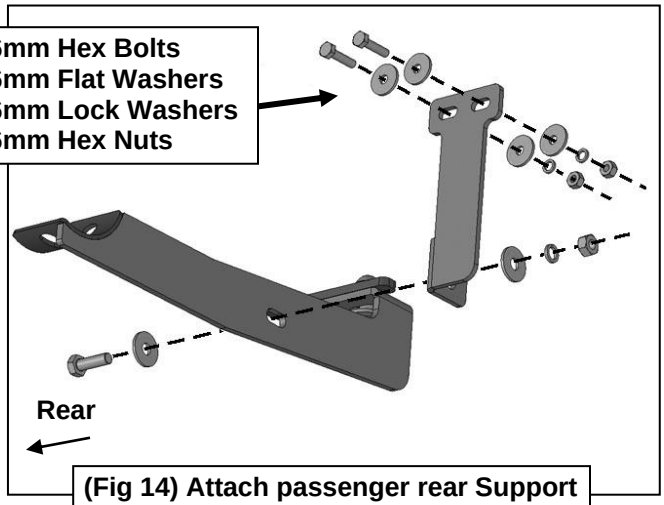

(Fig 14) Attach passenger rear Support Brackets to back of pinch weld

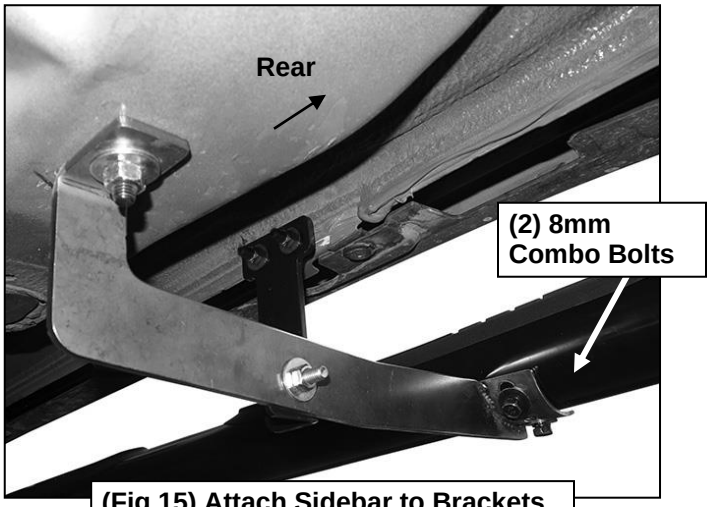

(Fig 15) Attach Sidebar to Brackets

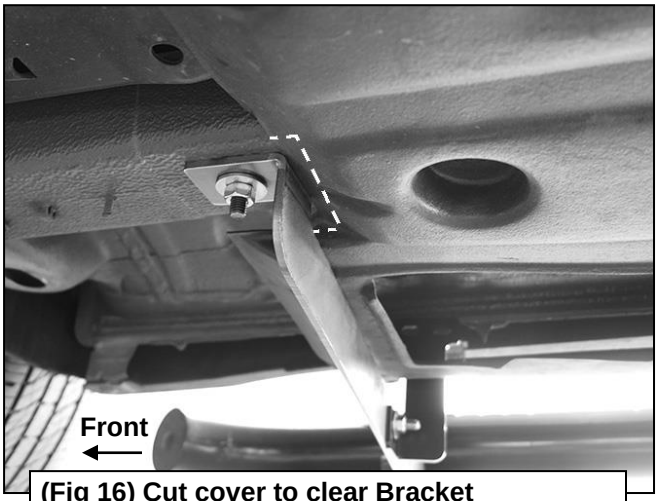

(Fig 16) Cut cover to clear Bracket (passenger front mounting Bracket pictured)

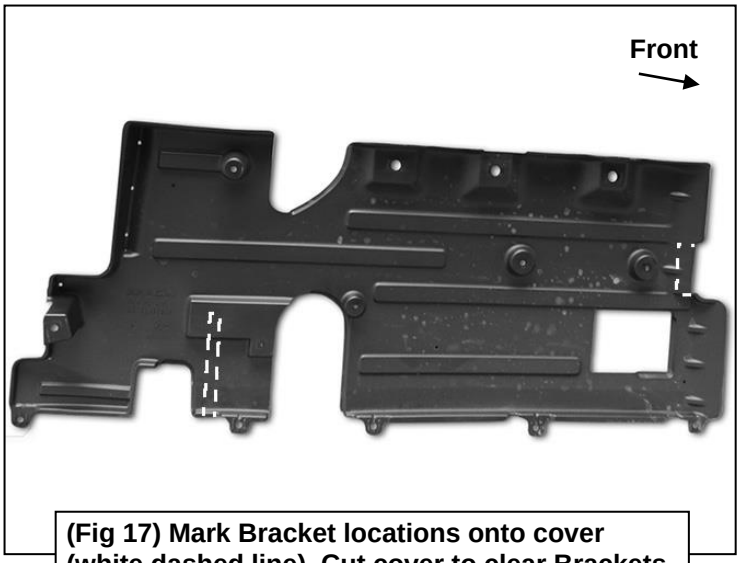

(Fig 17) Mark Bracket locations onto cover (white dashed line). Cut cover to clear Brackets

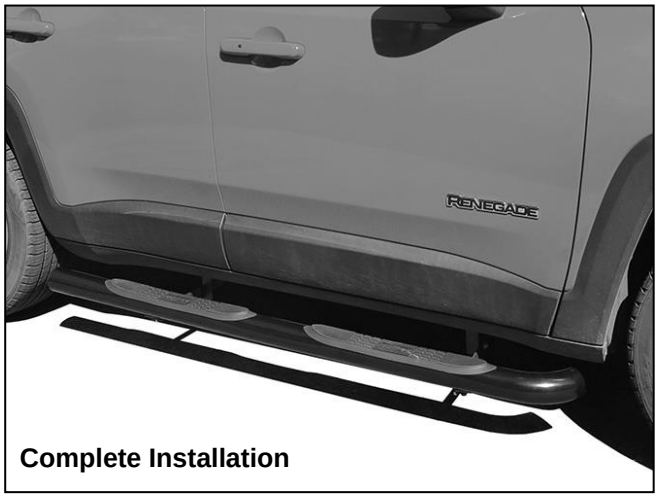

Complete Installation