INSTALLATION INSTRUCTIONS

BLACK MODULAR GRILL GUARD FOR FORD F150 15-20

PART # 17FP32MA

Before Installation

- Please read the instruction completely for easy installation, which will also help you to avoid scratches or other potential damages to your appealing car.
- The information shown here is for reference only and may differ from the product that you receive, however the goods are fitted in the same way.

Care and Cleaning

- Mild soap may be used also to clean the Product.
- Please periodically check and retighten all the hardware and clean the investment for a refresh look.

Parts list

NO.	QTY	NAME	NO.	QTY	NAME
①	1	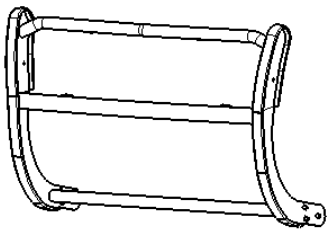 Front Guard	②	1	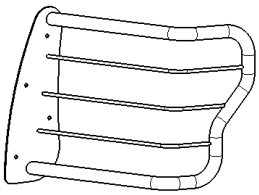 Left Brush Guard
③	1	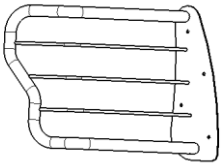 Right Brush Guard	④	1	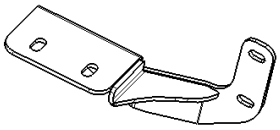 Driver/left Frame Bracket
⑤	1	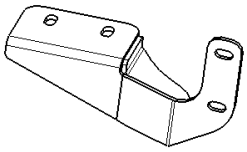 Passenger/right Frame Bracket	⑥	1	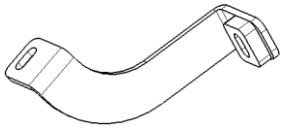 Driver/left Top Bracket

⑦	1	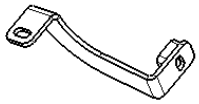 Driver/left Top Bracket	⑧	1	Allen Wrench S=5
⑨	4	Split lock washer D12	⑩	10	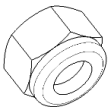 Hex Nylon Lock Nut M8
⑪	4	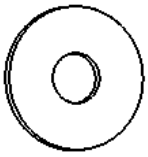 Flat Washer D12	⑫	16	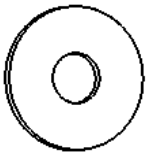 Large Washer D8
⑬	8	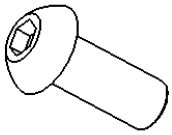 Socket head cap screw M8_25	⑭	2	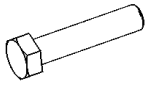 hex bolt M8_30
⑮	4	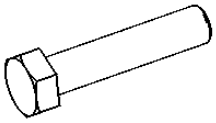 hex bolt M12_35	⑯	4	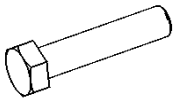 10mm x 30mm Hex Bolts
⑰	2	Split lock washer D8	⑱	6	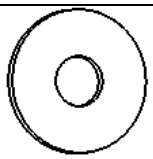 Flat Washer D8
⑲	4	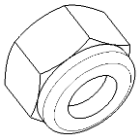 10mm Nylon Lock Nuts	⑳	2	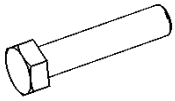 hex bolt M8_40
㉑	8	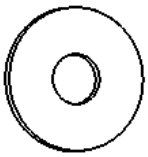 10mm Flat Washers	㉒	2	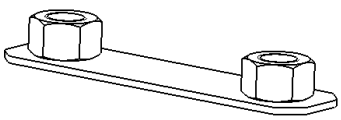 Double Nut Plate
㉓	1	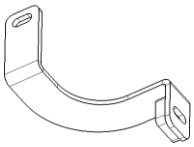 Left Mounting Bracket	㉔	1	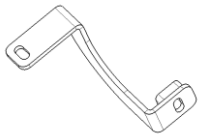 Right Mounting Bracket

Installation Step

Install left and right brush guard on the front guard as figure 1.

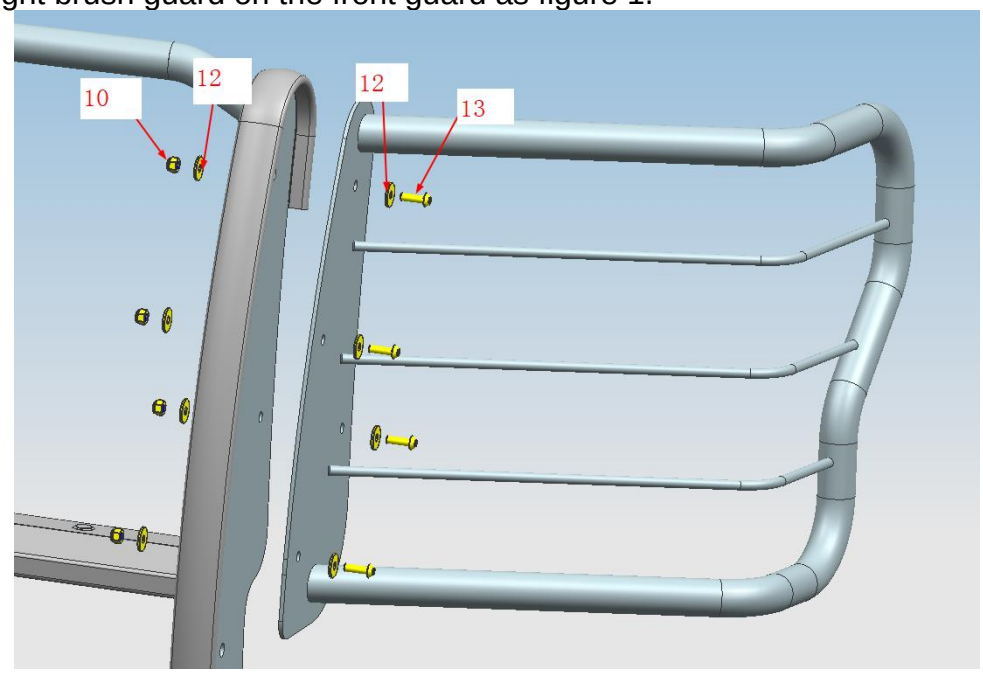

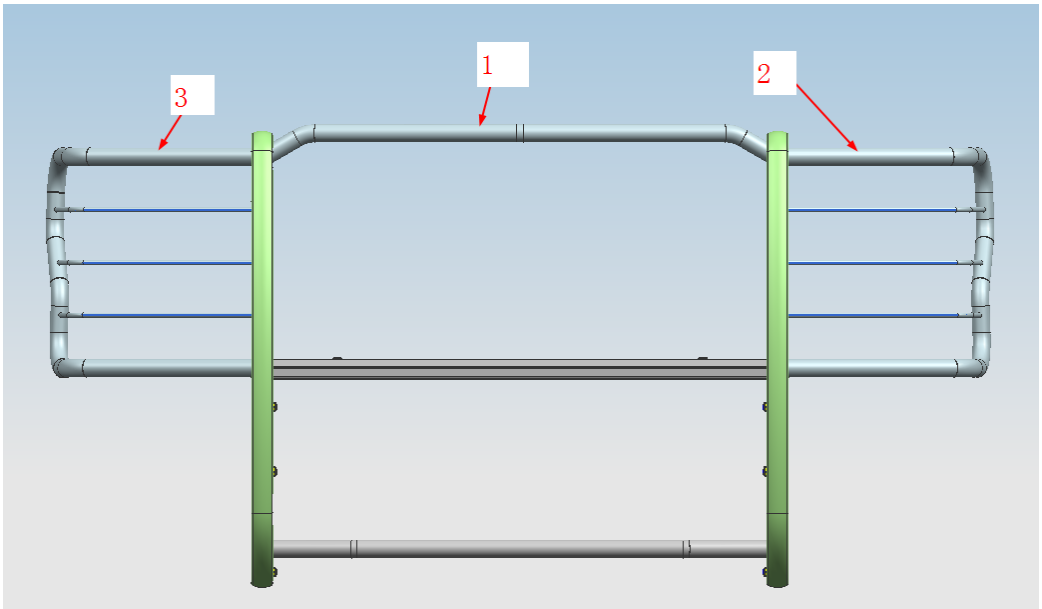

PARTS LIST:

1	Grille Guard	4	12mm Lock Washer
1	Driver/left Frame Bracket	4	10-1.5mm x 30mm Hex Bolt
1	Passenger/right Frame Bracket	8	10mm x 24mm OD x 2.2mm Flat Washer
1	**Driver/left Top Bracket (2015-17)**	**4**	**10-1.5mm Nylon Locknut**
1	**Passenger/right Top Bracket (2015-17)**	**2**	**8-1.25mm x 40mm Hex Bolt**
1	**Driver/left Top Bracket (2018)**	**2**	**8-1.25mm x 30mm Hex Bolt**
1	**Passenger/right Top Bracket (2018)**	**6**	**8mm x 22mm OD x 2mm Flat Washer**
2	**12-1.75mm Double Nut Plate**	**2**	**8mm Lock Washer**
4	12-1.75 x 35mm Hex Bolt	2	8-1.25mm Nylon Lock Nut
4	12 x 32mm OD x 3mm Flat Washer		

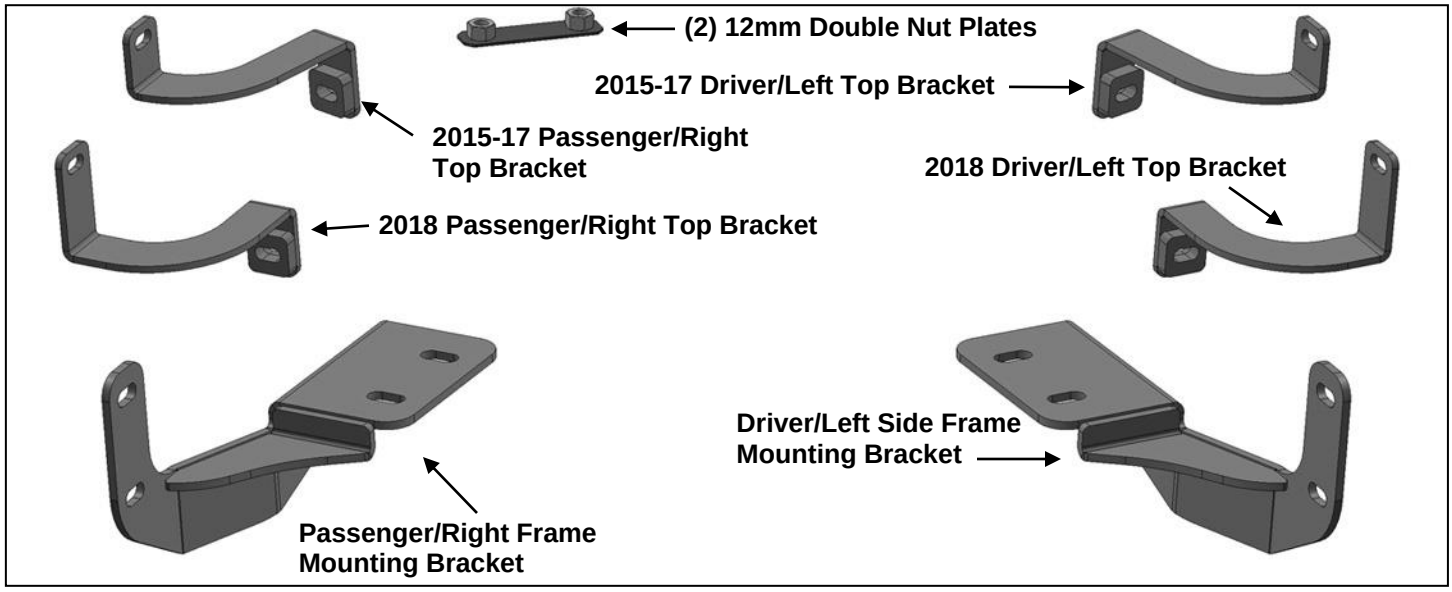

PROCEDURE:

REMOVE CONTENTS FROM BOX. VERIFY ALL PARTS ARE PRESENT. READ INSTRUCTIONS CAREFULLY BEFORE STARTING INSTALLATION. ASSISTANCE IS RECOMMENDED. CUTTING IS REQUIRED ON VEHICLES WITHOUT TOW HOOKS. NOTE: It may be necessary to remove/relocate the front license plate and license plate bracket on models equipped with Ecoboost engine.

1. Select the correct Top Support and Frame Bracket installation for your model year.

2015-17 Models Top Support Bracket installation only:

- **a.** From under and behind the bumper, locate the top of the driver side bumper bracket, **(Figures 1, 5 & 6)**. Next, locate the center bumper bolt attaching the top of the bracket to the back of the bumper. It may be necessary to temporarily release the clips and move the rubber cover to access the bumper bolts, **(Figure 1)**.
- **b.** Remove the hex bolt from the top-center of the bumper bracket, **(Figures 2, 4, 6 & 7)**. **NOTE**: On some models, it may be necessary/easier to remove bumper to install Top Brackets. If bumper removal is necessary, refer to **2018** model year instructions for installation.
- **c.** Select the driver side Top Bracket, **(Figure 3)**. Insert the Top Bracket, (end with welded spacer), into the space between the top of the bumper and the bottom of the grille. Line up the Bracket with the mounting hole in the bumper bracket.
- **d.** Attach the driver/left Top Support Bracket to the back of the bumper bracket with the included (1) 8mm x 40mm Hex Bolt, (1) 8mm Lock Washer and (1) 8mm Flat washer, **(Figures 3—6)**. Leave loose at this time.
- **e.** Repeat to install the passenger side Top Bracket.

Determine if the **2015-17** model vehicle is equipped with factory tow hooks, **(Figures 7 & 9)**.

2015-17 Frame Bracket Installation on vehicles with Factory Tow Hooks:

- **a.** Remove both tow hooks and plastic trim. **NOTE**: Plastic trim will not be reinstalled.

b. Select the driver side Frame Mounting Bracket, **(Figure 8)**. Insert the Bracket between the tow hook and the frame.

c. Reattach the tow hook over the Bracket with the factory bolts. Leave hardware loose. If Bracket installation interferes with tow hook, remove tow hook and attach the Bracket to the bottom of the frame and Nut Plate with the included (2) 12mm x 35mm Hex Bolts, (2) 12mm Lock Washers and (2) 12mm Flat Washers, **(Figure 8)**

d. Repeat for passenger side Frame Bracket installation.

2015-17 Frame Bracket Installation on Models without Tow Hooks:

a. From behind the bumper, release the clips attaching the plastic bumper pads to the steel bumper, **(Figures 9—11)**. Temporarily remove the pads and license plate mounting bracket. Next, remove the air dam and plastic splash guard from the bottom of the bumper.

b. Insert (1) 12mm Double Nut Plate into the end of the driver side of the frame, **(Figures 12 & 13)**. Line up the Nut Plate with the holes in the bottom of the frame, **(Figure 14)**.

c. Select the driver side Frame Mounting Bracket. Attach the Bracket to the bottom of the frame and Nut Plate with the included (2) 12mm x 35mm Hex Bolts, (2) 12mm Lock Washers and (2) 12mm Flat Washers, **(Figures 8 & 16)**. Leave hardware loose at this time.

d. Repeat the previous **Steps a—c** for passenger side Frame Mounting Bracket installation.

e. Hold splash guard up against bottom of brackets and in line with mounting points on bottom of bumper. Mark location of brackets onto splash guard, **(Figure 15)**.

f. Cut out slots to clear brackets. Cut as little as possible to clear brackets.

g. Temporarily remove the Frame Brackets.

h. Reinstall the splash guard and reinstall Brackets through splash guard. Proceed to **Step 2**.

2018 Models Top Support Bracket installation only.

a. Remove the plastic fill panels from the center of the front bumper, **(Figure 17)**.

b. Disconnect any wire harness leading to the front bumper, (fog lights for example).

c. From behind the bumper, remove factory hex nuts attaching the bottom of the bumper bracket to the frame bracket.

d. Through the opening in the front of the bumper, remove the factory hex nuts and remove the bumper, **(Figures 17 & 18)**. **IMPORTANT**: Assistance is required to hold bumper in place as hardware is removed.

e. Select the driver side 2018 Top Bracket, **(Figure 19)**. Remove the hex bolt from the top-center of the bumper bracket on the back of the bumper, **(Figures 20—22)**.

f. Attach the Support Bracket to the back of the bumper bracket with the included (1) 8mm x 40mm Hex Bolt, (1) 8mm Lock Washer and (1) 8mm Flat washer, **(Figures 20—22)**. With Bracket mounting plate straight up and down, fully tighten the Hex Bolt.

g. Repeat to install the passenger side Top Bracket.

h. Do not reinstall bumper at this time.

2018 Model Frame Bracket Installation on vehicles with Factory Tow Hooks (bumper removed).

a. Remove both tow hooks and plastic trim. **NOTE**: Plastic trim will not be reinstalled.

b. Reinstall bumper and plastic splash guard.

c. Select the driver side Frame Mounting Bracket, **(Figure 16)**. Insert the Bracket between the tow hook and the frame.

d. Reattach the tow hook over the Bracket with the factory bolts. Leave hardware loose. If Bracket installation interferes with tow hook, remove tow hook and attach the Bracket to the bottom of the frame and Nut Plate with the included (2) 12mm x 35mm Hex Bolts, (2) 12mm Lock Washers and (2) 12mm Flat Washers, **(Figure 16)**

e. Repeat for passenger side Frame Bracket installation.

2018 Frame Bracket Installation on Models without Tow Hooks (bumper removed):

a. Insert (1) 12mm Double Nut Plate into the end of the driver side of the frame, **(Figures 12 & 13)**. Line up the Double Nut Plate with the holes in the bottom of the frame, **(Figure 14)**.

b. Select the driver side Frame Mounting Bracket. Attach the Bracket to the bottom of the frame and Nut Plate with the included (2) 12mm x 35mm Hex Bolts, (2) 12mm Lock Washers and (2) 12mm Flat Washers, **(Figure 16)**. Leave hardware loose at this time.

c. Repeat the previous **Steps** for passenger side Frame Mounting Bracket installation.

d. Remove splash guard/air dam from bottom of bumper.

   e. Temporarily reinstall bumper. Hold splash guard up against bottom of brackets and in line with mounting points on bottom of bumper. Mark location of brackets onto splash guard.
   f. Cut out slots to clear brackets. Cut as little as possible to clear brackets, **(Figure 15)**.
   g. Reattach splash guard and reinstall the bumper at this time, **(Figure 23)**. **NOTE**: It may be necessary to temporarily remove the Frame Brackets to reinstall the bumper and splash guard.

2. With assistance, place the Grille Guard up to the outside of the Brackets. Attach the Grille Guard to the Frame Brackets with (4) 10mm x 30mm Hex Bolts, (8) 10mm Flat Washers and (4) 10mm Nylon Lock Nuts, **(Figures 24 & 25)**. Snug but do not tighten hardware at this time.

3. Line up the driver side Top Bracket with the hole in the upright on the Grille Guard. Attach the Bracket to the Grille Guard with (1) 8mm x 30mm Hex Bolt, (2) 8mm Flat Washers, (1) 8mm Nylon Lock Nut, **(Figures 24 & 25)**. Repeat to attach the passenger side Top Bracket to the Grille Guard.

4. Center the Grille Guard on the vehicle. Once properly adjusted, fully tighten all hardware. **REMINDER**: On 2015-17 models only, fully tighten hex bolts attaching Top Support Brackets to back of bumper.

5. Do periodic inspections to the installation to make sure that all hardware is secure and tight.

To protect your investment, wax this product after installing. Regular waxing is recommended to add a protective layer over the finish. Do not use any type of polish or wax that may contain abrasives that could damage the finish.
For stainless steel: Aluminum polish may be used to polish small scratches and scuffs on the finish. Mild soap may be used also to clean the Grille Guard.
For gloss black finishes: Mild soap may be used to clean the Grille Guard.

Driver Side Installation Pictured

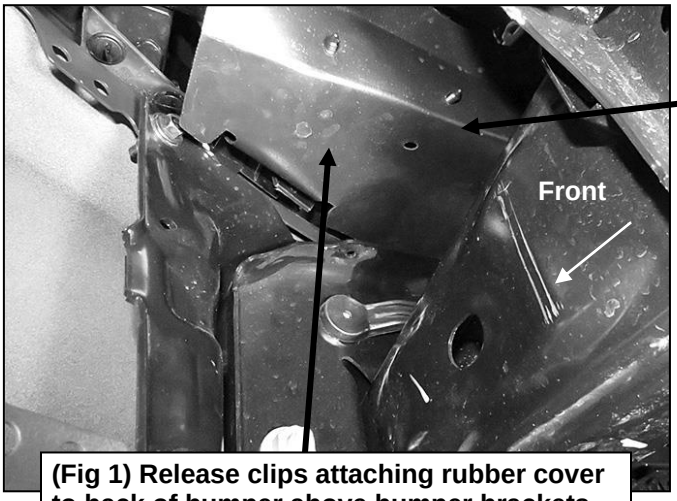

(Fig 1) Release clips attaching rubber cover to back of bumper above bumper brackets

2015-17 models: From behind bumper, release clips attaching rubber cover to back of bumper above bumper brackets to access the bumper bolts (Fig 7).
Insert the Top Bracket (Fig 9 & 12) into gap between top of bumper and bottom of grille.

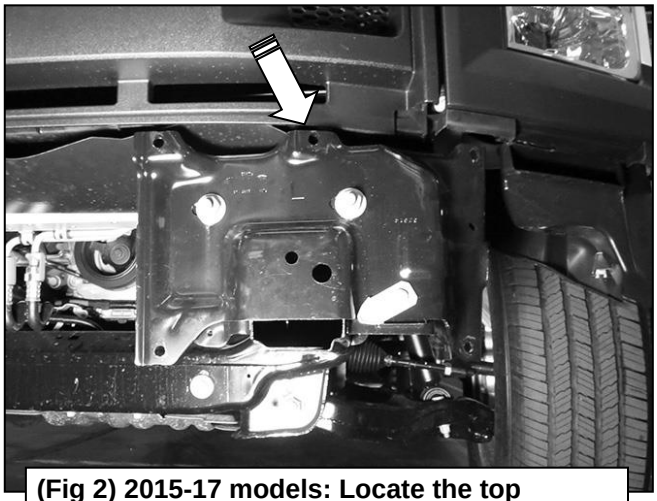

(Fig 2) 2015-17 models: Locate the top bumper bolts. Remove the driver side middle bolt (see arrow-bumper pictured removed for reference only-do not remove bumper)

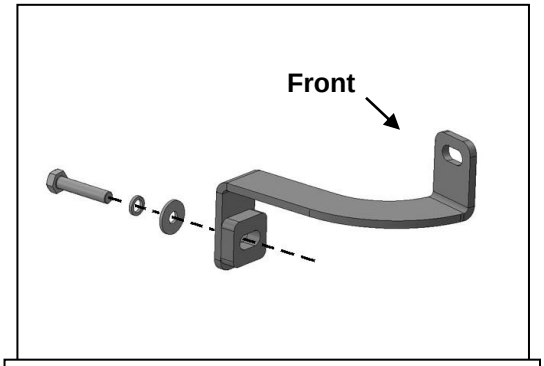

(Fig 3) 2015-17 Driver side Top Bracket

Driver Side Installation Pictured

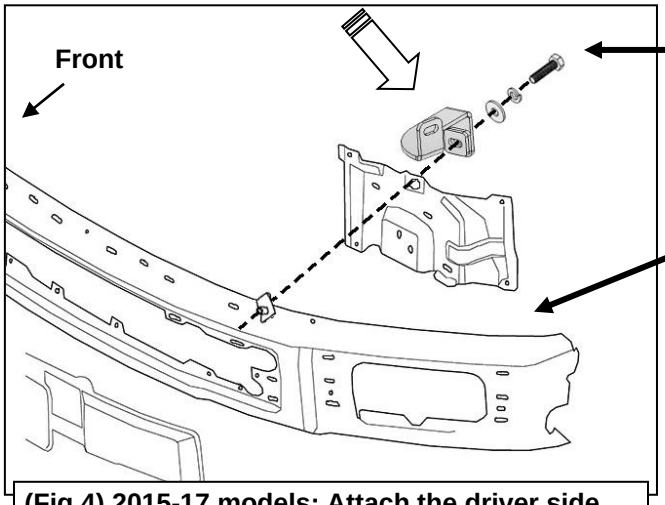

8mm x 40mm Hex Bolt
8mm Lock Washer
8mm Flat Washer

From behind bumper, release clips attaching rubber cover to back of bumper above bumper brackets to access the bumper bolts (Fig 7). Insert the Top Bracket (Fig 9 & 12) into gap between top of bumper and bottom of grille.

(Fig 4) 2015-17 models: Attach the driver side Top Bracket to the back of the middle mounting hole on the top of the bumper bracket

8mm x 40mm Hex Bolt
8mm Lock Washer
8mm Flat Washer

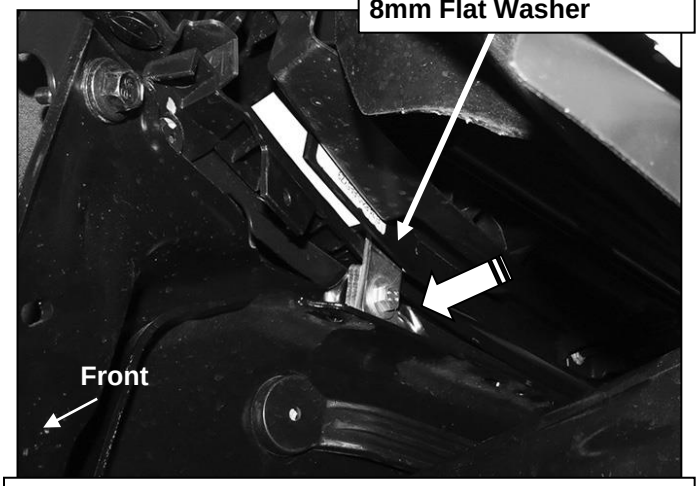

(Fig 5) 2015-17 models: Attach the driver side Top Bracket to the middle mounting hole on the top of the bumper bracket (pictured from behind bumper)

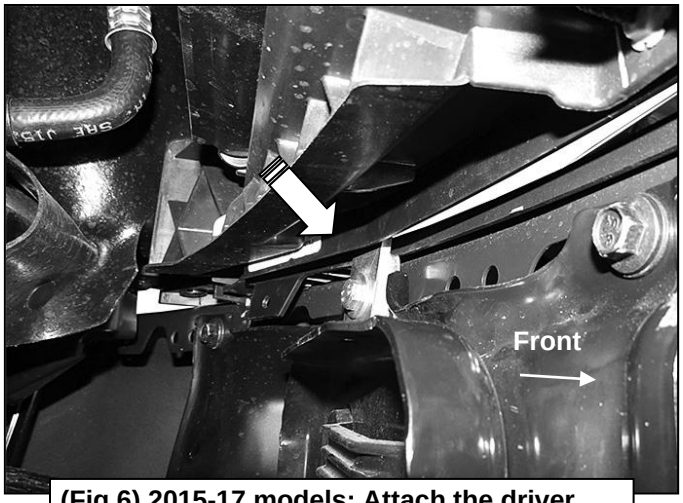

(Fig 6) 2015-17 models: Attach the driver side Top Bracket to the middle mounting hole on the top of the bumper bracket (pictured from behind center of bumper)

Remove tow hooks and plastic trim around tow hooks

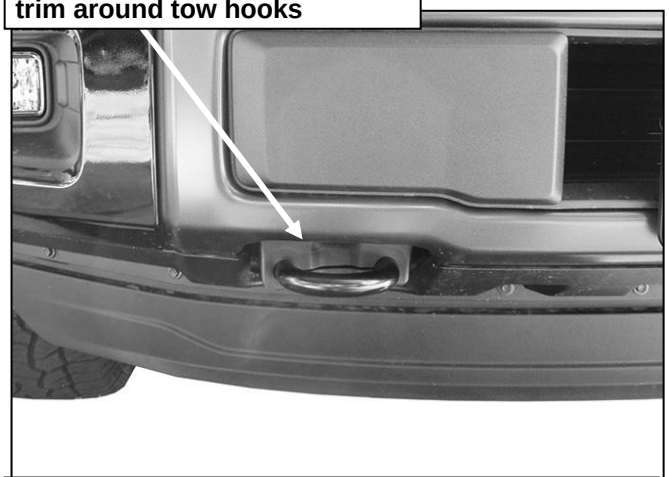

(Fig 7) Passenger side 2015-17 model w/tow hook

Driver Side Installation Pictured

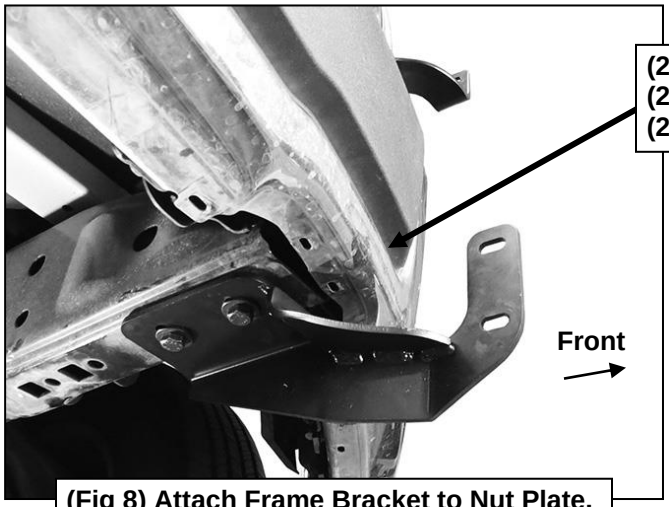

(Fig 8) Attach Frame Bracket to Nut Plate.

(Fig 9) 2015-17 models: Driver side without tow hook

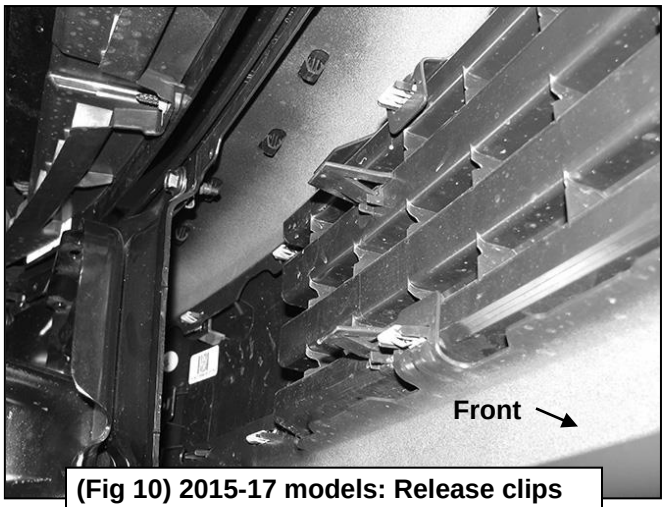

(Fig 10) 2015-17 models: Release clips attaching bumper pad to steel bumper

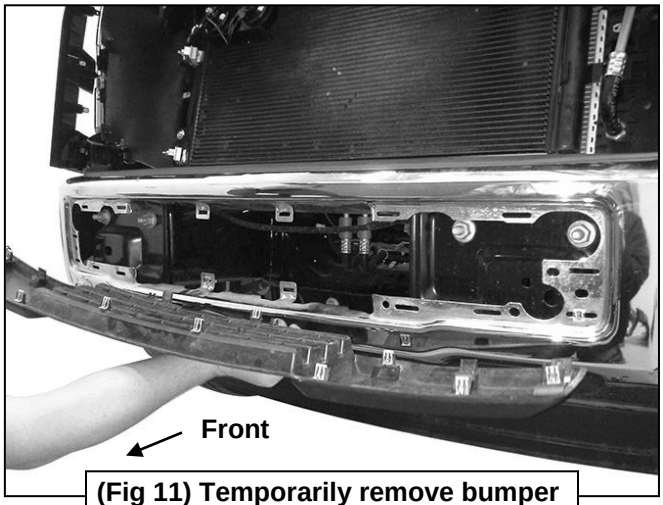

(Fig 11) Temporarily remove bumper pad. Grille removed for instruction purposes only, do not remove grille

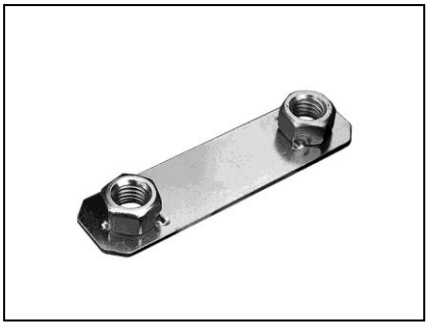

Driver Side Installation Pictured

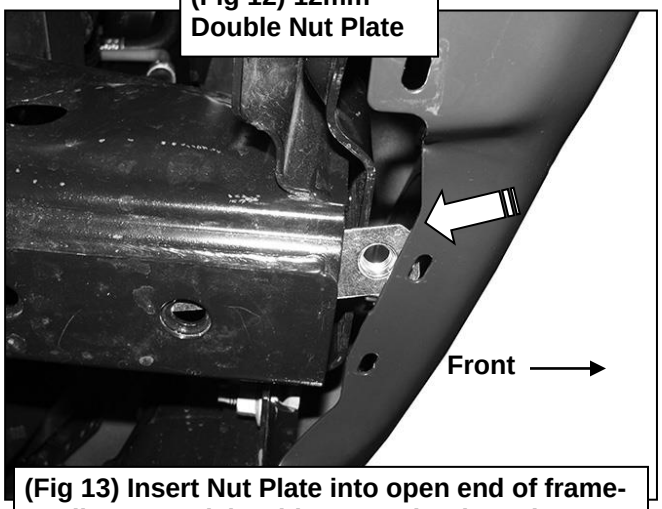

(Fig 12) 12mm Double Nut Plate

(Fig 13) Insert Nut Plate into open end of frame- applies to models without tow hooks only

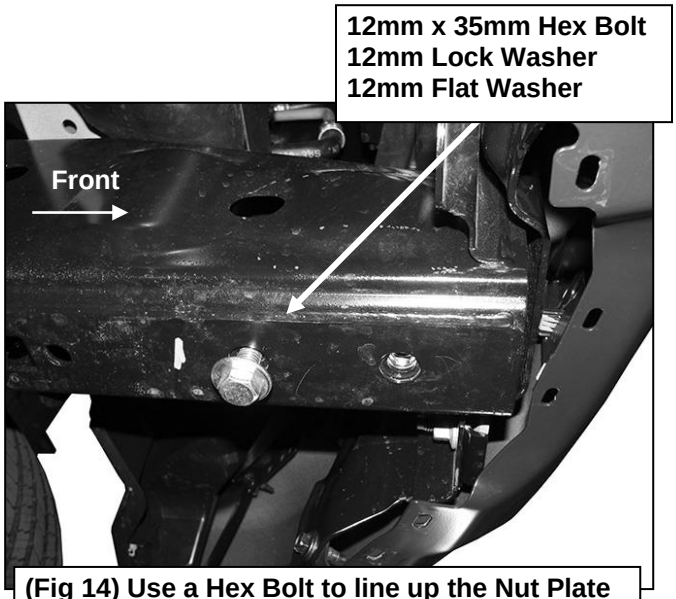

12mm x 35mm Hex Bolt
12mm Lock Washer
12mm Flat Washer

(Fig 14) Use a Hex Bolt to line up the Nut Plate

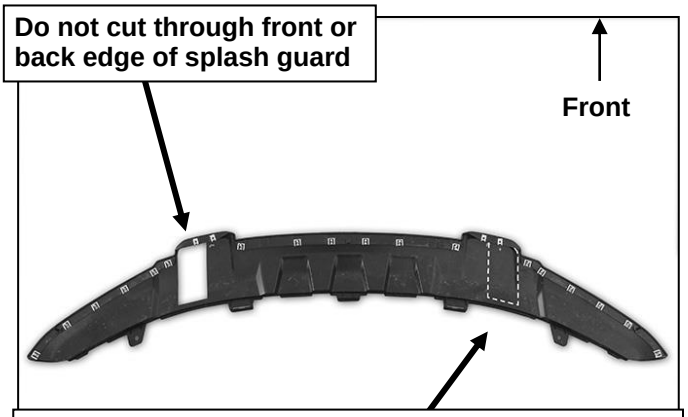

Do not cut through front or back edge of splash guard

Fig 15) 15-17 models pictured: Hold the splash guard up to the bottom of Frame Brackets. Trace location of Brackets onto back of the plastic cover (dashed line). Cut as required to clear brackets

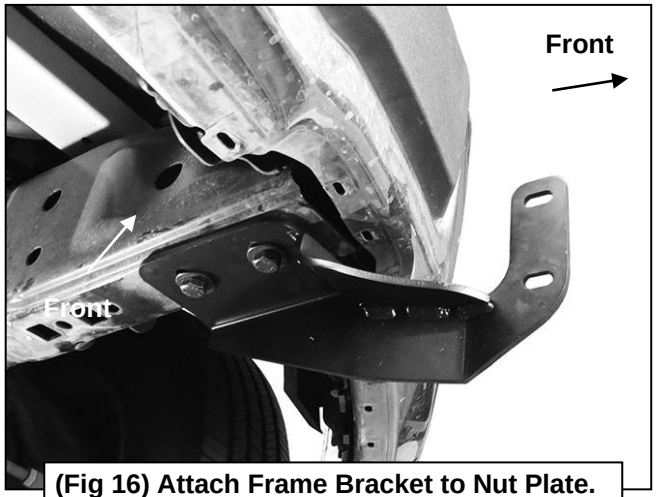

(Fig 16) Attach Frame Bracket to Nut Plate.

(Fig 17) 2018 models: Remove plastic cover to access hex nuts attaching bumper

Driver Side Installation Pictured

(Fig 18) 2018 models: Remove bumper assembly

8mm x 40mm Hex Bolt
8mm Lock Washer
8mm Flat Washer

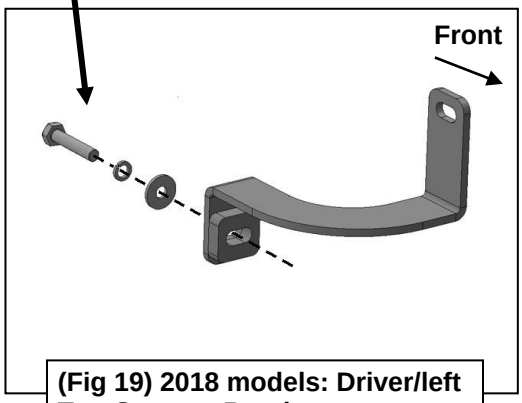

(Fig 19) 2018 models: Driver/left Top Support Bracket

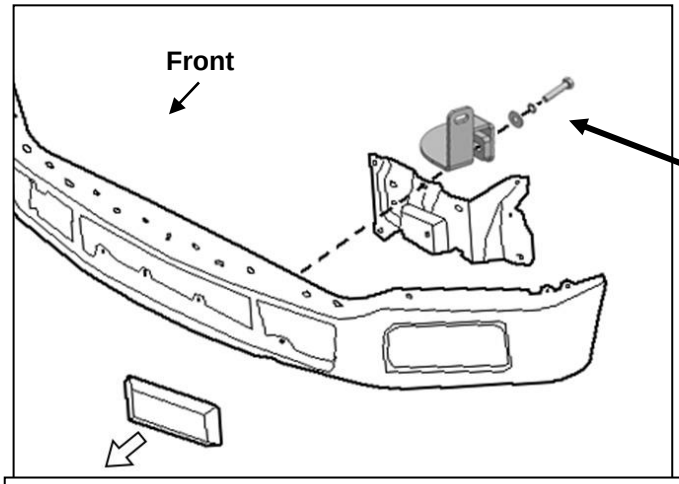

(Fig 20) 2018 models: Remove bumper. Attach Top Support Brackets to back of bumper and bracket

8mm x 40mm Hex Bolt
8mm Lock Washer
8mm Flat Washer

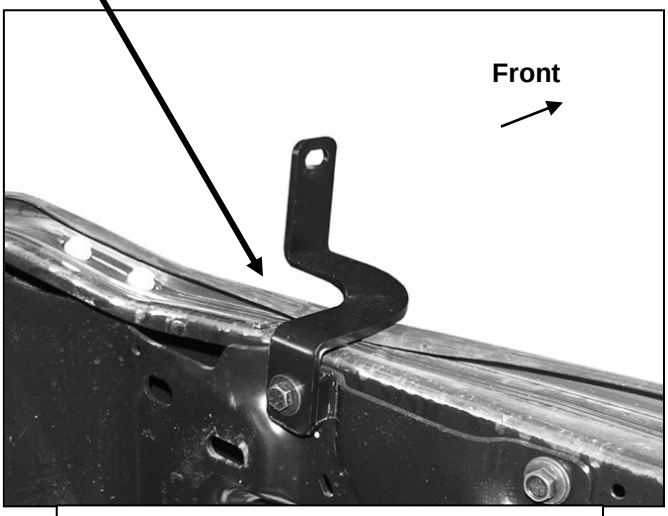

(Fig 21) 2018 models: Attach Top Support Bracket to back of bumper

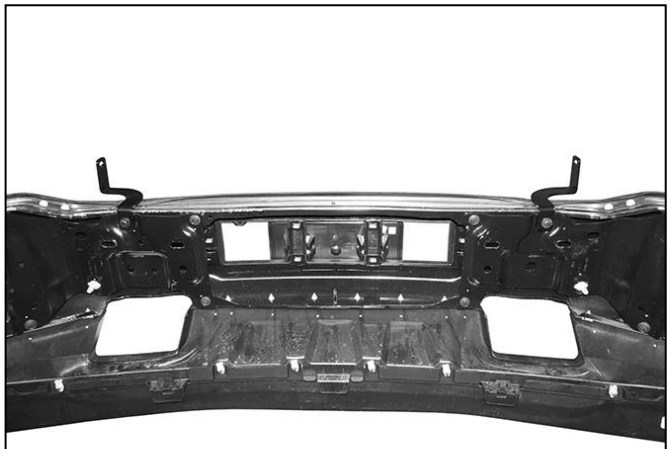

(Fig 22) 2018 models: Top Support Brackets attached to bumper

Driver Side Installation Pictured

(Fig 23) 2018 models: Top Support Bracket and Frame Bracket installed

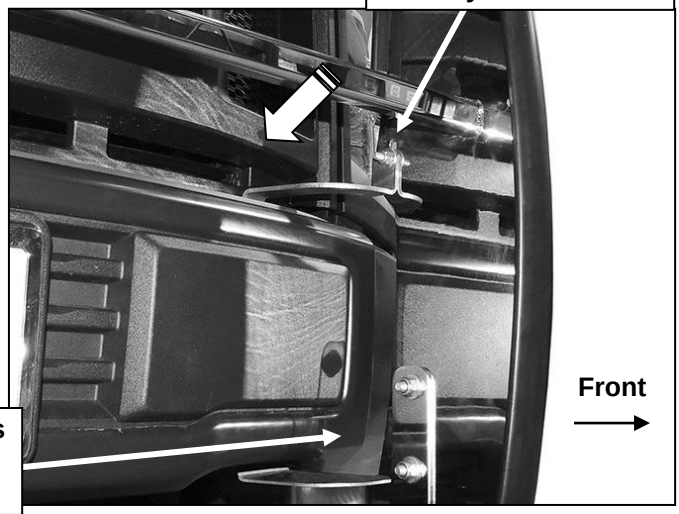

(Fig 24) 2015-17 models: Complete installation

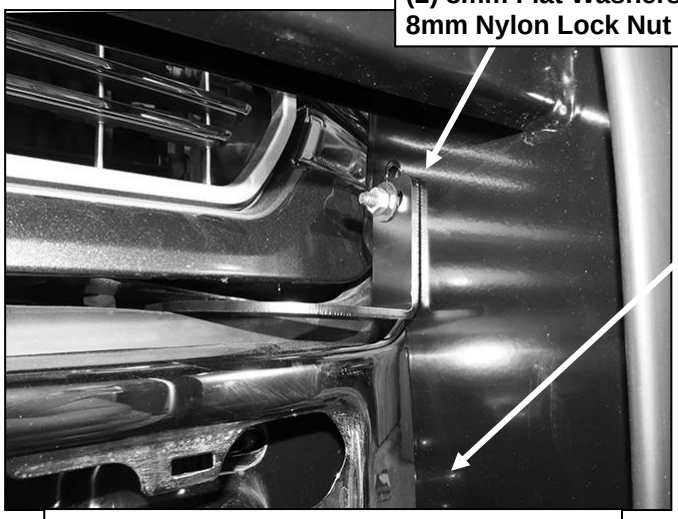

(Fig 25) 2018 models: Complete installation

Complete Installation