INSTALLATION INSTRUCTIONS

3" BULL BAR
19-23 DODGE RAM 1500
(Excl. Rebel & TRX Trim, 19-23 Ram 1500 Classic and 20-22 Ram 1500 Diesel Models)
PART#BBDG112A

[Type here]

3” BULL BAR
19-23 DODGE RAM 1500
(Excl. Rebel & TRX Trim, 19-23 Ram 1500 Classic and 20-22 Ram 1500 Diesel Models)

PARTS LIST:

1	3in Bull Bar	4	12-1.75mm x 35mm Hex Bolts
1	Driver/Left Side Frame Bracket	8	12mm x 32mm OD x 3mm Flat Washers
1	Passenger/Right Side Frame Bracket	4	12mm Lock Washers
1	Driver/Left Side Support Bracket	4	12-1.75mm Hex Nuts
1	Passenger/Right Side Support Bracket	6	8-1.25mm x 30mm Hex Bolts
2	8-1.25mm Bolt Plates	10	8mm x 24mm OD x 2mm Flat Washers
2	8mm Plastic Retainers	8	8mm Lock Washers
		4	8mm Hex Nuts

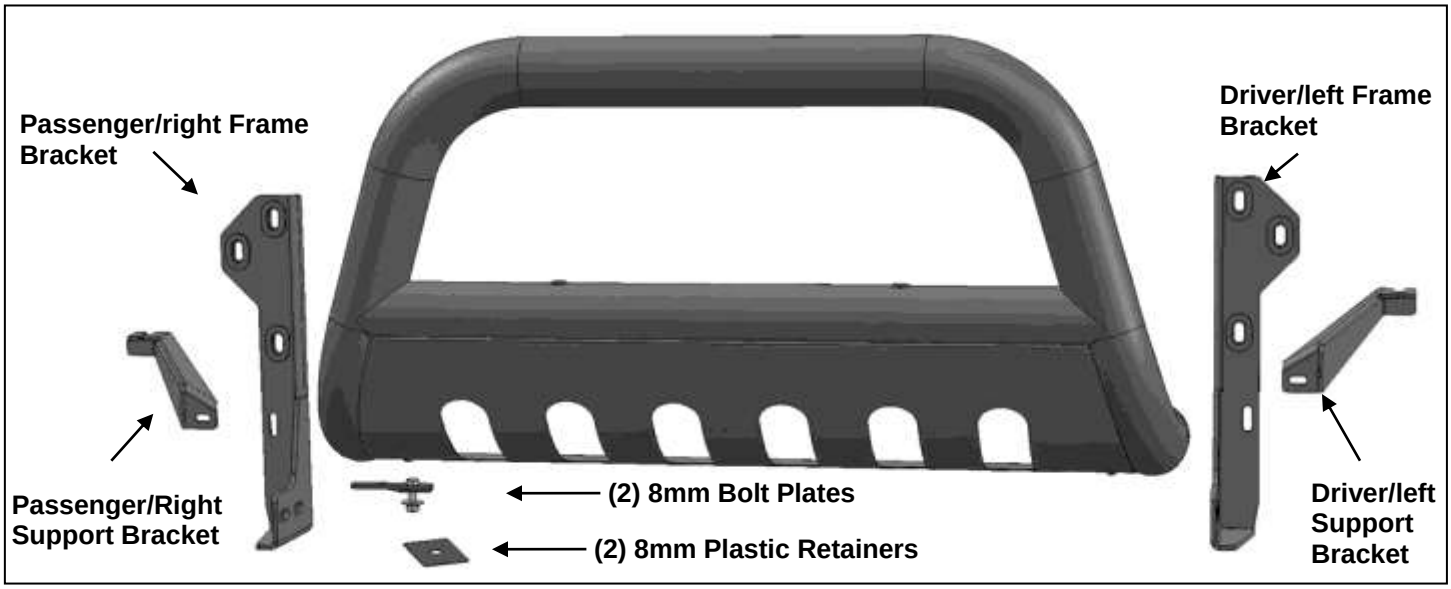

PROCEDURE:

REMOVE CONTENTS FROM BOX. VERIFY ALL PARTS ARE PRESENT. READ INSTRUCTIONS CAREFULLY BEFORE STARTING INSTALLATION. CUTTING IS REQUIRED. ASSISTANCE IS RECOMMENDED. INSTALLATION MAY INTERFERE WITH FRONT BUMPER MOUNTED SENSORS.

1. Start installation under the front bumper. Carefully remove the plastic lower air dam attached to the bottom of the bumper. Do not remove the electronic “active air dam” behind the bumper if equipped. Pay close attention to the type and location of all factory hardware for reinstallation.
2. Move to the back of the driver/left side of the bumper, **(Figure 1)**. Select (1) 8mm Bolt Plate and (1) 8mm Plastic Retainer. Insert the Bolt Plate into the space between the outer bumper cover and bumper bracket, **(Figure 2)**. Insert the threaded part of the Bolt Plate back through the hole in the bumper bracket. Thread the Plastic Retainer onto the Bolt Plate to hold it in place position. **NOTE**: The Plastic retainer is used to help hold the Bolt Plate in place but use is not mandatory for Bracket installation.
3. Next, Remove the (2) factory hex bolts attaching the bumper to the bumper bracket, **(Figures 1 & 2)**. Select the driver/left Frame Mounting Bracket. Attach the Bracket to the back of the bumper with the included longer (2) 8mm x 35mm Hex Bolts, (2) 8mm Lock Washers and (2) 8mm Flat Washers, **(Figure 3)**. Attach the Bracket to the 8mm Bolt Plate with (1) 8mm Flat Washer, (1) 8mm Lock Washer and (1) 8mm Hex Nut. Do not fully tighten hardware at this time.
4. Loosen but <u>do not remove</u> the hex bolt from the bottom of the frame, **(Figures 1 & 5)**. Select the driver/left Support Bracket, **(Figure 4)**. Insert the slotted end of the Bracket under the hex bolt.

   a. On models with tow hooks, slide the Bracket between the head of the hex bolt and the large flat washer, **(Figure 5)**. Do not tighten hex bolt at this time.
   b. On models without tow hooks, slide the Bracket between the steel sleeve on the frame and the head of the hex bolt, **(Figures 1 & 4)**.

5. Line up the lower end of the Support Bracket with the slot in the Frame Bracket. Attach the Support Bracket to the Frame Bracket with (1) 8mm x 30mm Hex Bolt, (2) 8mm Flat Washers, (1) 8mm Lock Washer and (1) 8mm Hex Nut, **(Figure 4)**.

6. Repeat **Steps 2—5** to install the passenger/right Frame and Support Bracket.

7. With assistance, position the Bull Bar up to the outside of the Mounting Brackets. Use the included (4) 12-1.75mm x 35mm Hex Bolts, (8) 12mm Flat Washers, (4) 12mm Lock Washers and (4) 12mm Hex Nuts to attach the Bull Bar to the Mounting Brackets, **(Figure 6)**. Do not tighten hardware.

8. Stand back from the vehicle and check to see that the Bull Bar is centered and level on the vehicle and adjust as necessary. Fully tighten first the hardware securing the Mounting Brackets and Support Brackets to the vehicle. Do not tighten the 12mm hardware attaching the Bull Bar to the Mounting Brackets.

9. Temporarily remove the Bull Bar.

10. Hold the plastic air dam up to the bumper and align it with the mounting points. Mark the location of the Mounting Brackets onto the back of the air dam, **(Figure 7)**. Cut an approximately 1-1/2" wide slot out of the bottom of the air dam. **NOTE:** The size of the slot is an estimate only and may vary due to different factory designs for the air dam and front bumper covers. **IMPORTANT:** To avoid weakening the air dam, do not cut the slot any larger than necessary to clear Brackets only. Do not cut through the top edge or mounting points, **(Figure 7)**. Make several small cuts first and check the fit often for a clean installation.

11. Reinstall the air dam using the factory hardware. **NOTE**: It may be necessary to loosen the Bracket hardware to reinstall the air dam.

12. Reinstall the Bull Bar as described in **Step 7**.

13. Level and adjust the Bull Bar and fully tighten all hardware.

14. Do periodic inspections to the installation to make sure that all hardware is secure and tight.

To protect your investment, wax this product after installing. Regular waxing is recommended to add a protective layer over the finish. Do not use any type of polish or wax that may contain abrasives that could damage the finish.
For stainless steel: Aluminum polish may be used to polish small scratches and scuffs on the finish. Mild soap may be used also to clean the Bull Bar.
For gloss black finishes: Mild soap may be used to clean the Bull Bar.

Driver Side Installation Pictured

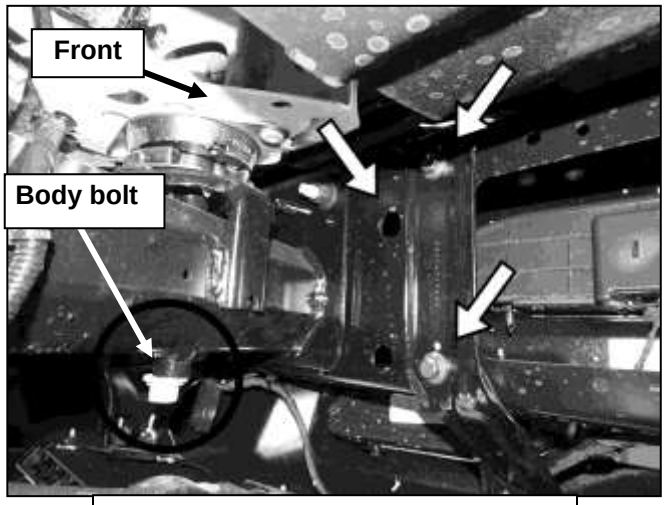

(Fig 1) Driver/left mounting location pictured from behind bumper

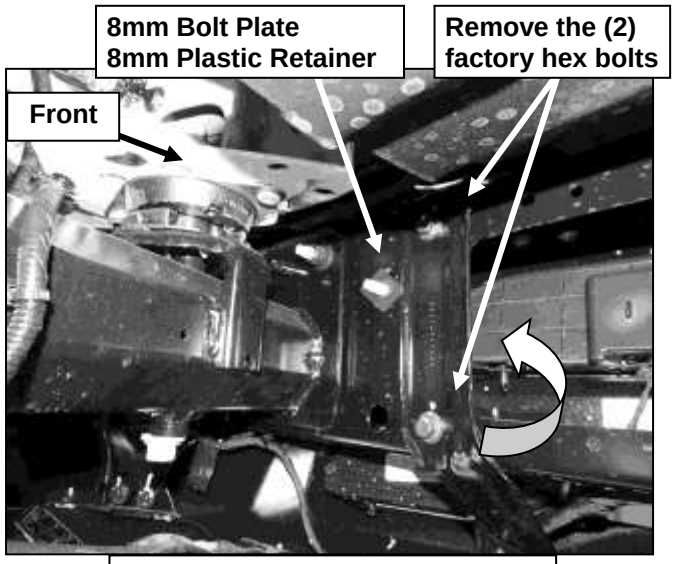

(Fig 2) Insert Bolt Plate back through bumper bracket (arrow)

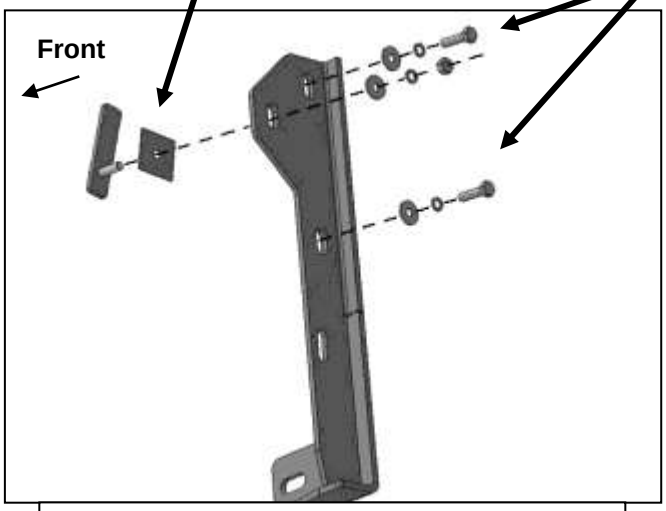

(Fig 3) Driver/left side Frame Bracket layout

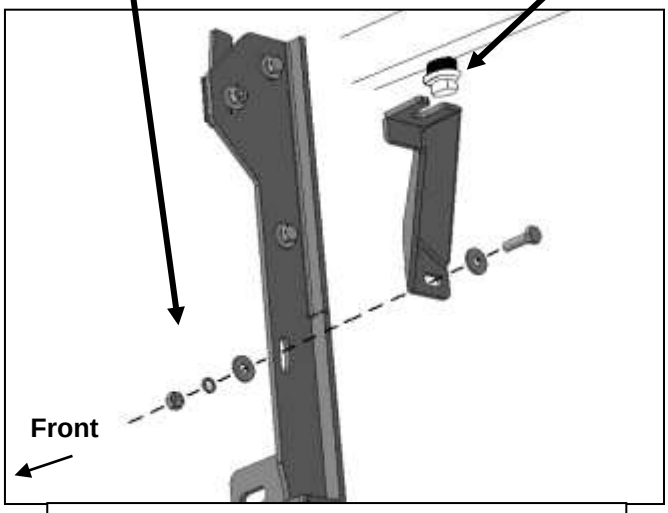

(Fig 4) Driver/left side Support Bracket attached to factory bolt and Frame Bracket

Driver Side Installation Pictured

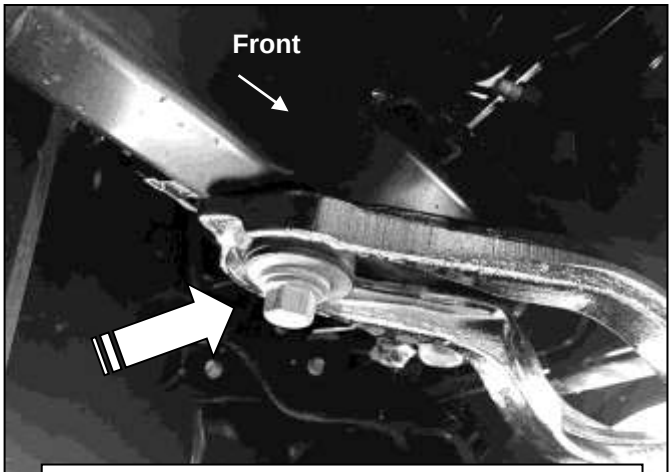

(Fig 5) Models with tow hook, loosen rear bolt (arrow) and slide top of Support Bracket between head of bolt and large flat washer

(2) 12mm x 35mm Hex Bolts
(4) 12mm Flat Washers
(2) 12mm Lock Washers
(2) 12mm Hex Nuts

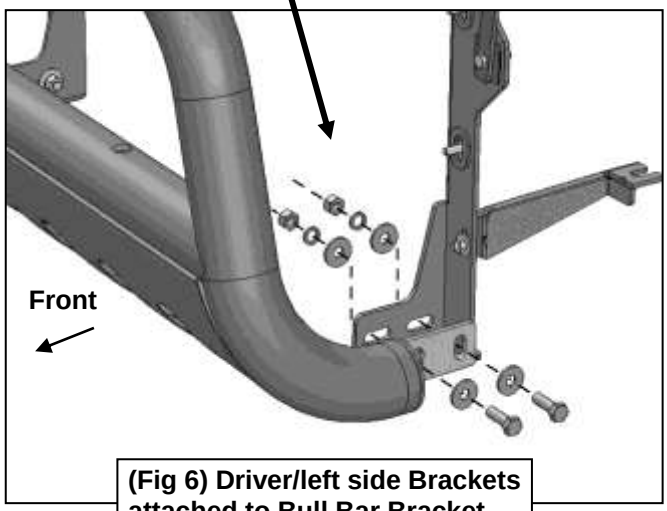

(Fig 6) Driver/left side Brackets attached to Bull Bar Bracket

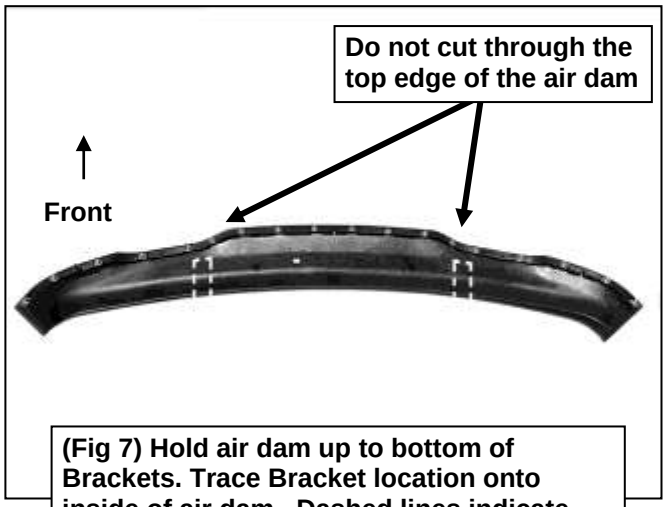

(Fig 7) Hold air dam up to bottom of Brackets. Trace Bracket location onto inside of air dam. Dashed lines indicate approximate sections to cut from air dam