INSTALLATION INSTRUCTION

Stainless Steel Bull Bar w/ Skid Plate

15-21 Ford Transit

PART # BBFOTR-SP / BBFOTRA-SP

BLACK HORSE
OFF ROAD

Attention:

- Please read this installation menu before installing this part. Protect your car properly in case there is any scratch might have.
- You may need to periodically to re-tighten all hardware for safety use after installation.
- Installation pictures are only for your reference, there might be some differences between pictures and real parts but no affect for your fitting.

PART LIST

NO.	NAME	QTY	REMARK	NO.	NAME	QTY	REMARK
①	Bull Bar	1		⑦	Spring Washer	8	φ12
②	Left Bracket	1		⑧	Hexagon Nut	8	M12
③	Right Bracket	1		⑨	Hexagon Bolt	2	M10x90
④	U Bolt	2		⑩	Large Washer	4	φ10x30x2.5
⑤	Hexagon Bolt	4	M12x35	⑪	Spring Washer	2	φ10
⑥	Large Washer	12	φ12x30x3.0	⑫	Hexagon Nut	2	M10

INSTALLATION PICTURE

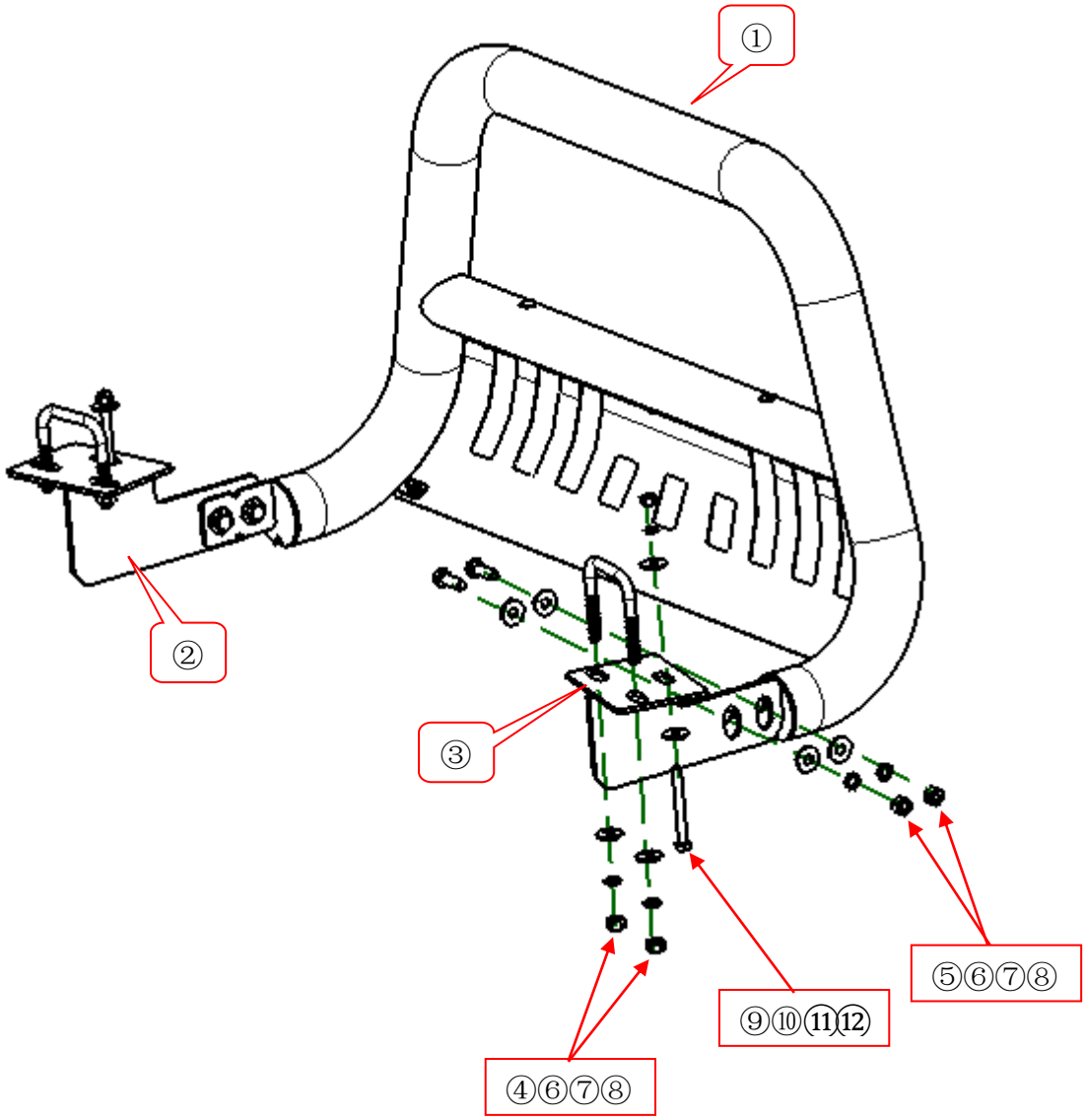

Disclaimer: Caused due to improper installation initiates some related problem and losses, are beyond our company's quality assurance.