BLACK HORSE OFF ROAD

TEL：1-866-XANATOS

INSTALLATION INSTRUCTIONS

MODULAR RUGGED GRILLE GUARD
03-23 CHEVY EXPRESS
PART# RU-GV02MA-B

PARTS LIST:

1	Grille Guard Main Body	36	10mm x 24mm x 2.2mm Flat Washer
1	Driver/Left Side Upright	8	10mm Lock Washer
1	Passenger/Right Side Upright	12	10-1.5mm Nylon Lock Nut
1	Driver/Left Side Brush Guard	8	10-1.5mm x 40mm Button Head Bolt
1	Passenger/Right Side Brush Guard	8	10-1.5mm Hex Nut
1	Bottom Tube	4	10-1.5mm x 30mm Hex Bolt
1	Driver/Left Side Mounting Bracket	4	10-1.5mm x 30mm Button Head Bolt
1	Passenger/Right Side Mounting Bracket	2	8-1.25mm x 16mm Button Head Bolt
1	Driver/Left Side Support Bracket	6	8mm x 24mm x 2mm Flat Washer
1	Passenger/Right Side Support Bracket	2	8-1.25mm x 25mm Button Head Bolt
2	LED Lamp Bracket	2	8mm Lock Washer
4	PVC Plastic Retainers ϕ10(δ0.7*40*40)	2	8mm Nylon Lock Nut
1	Allen Wrench S=5	2	6-1.00mm x 20mm Hex Bolt
1	Allen Wrench S=6	2	6mm x 18mm x 1.6mm Flat Washer
2	10-1.5mm U-Bolt	2	6mm Lock Washer

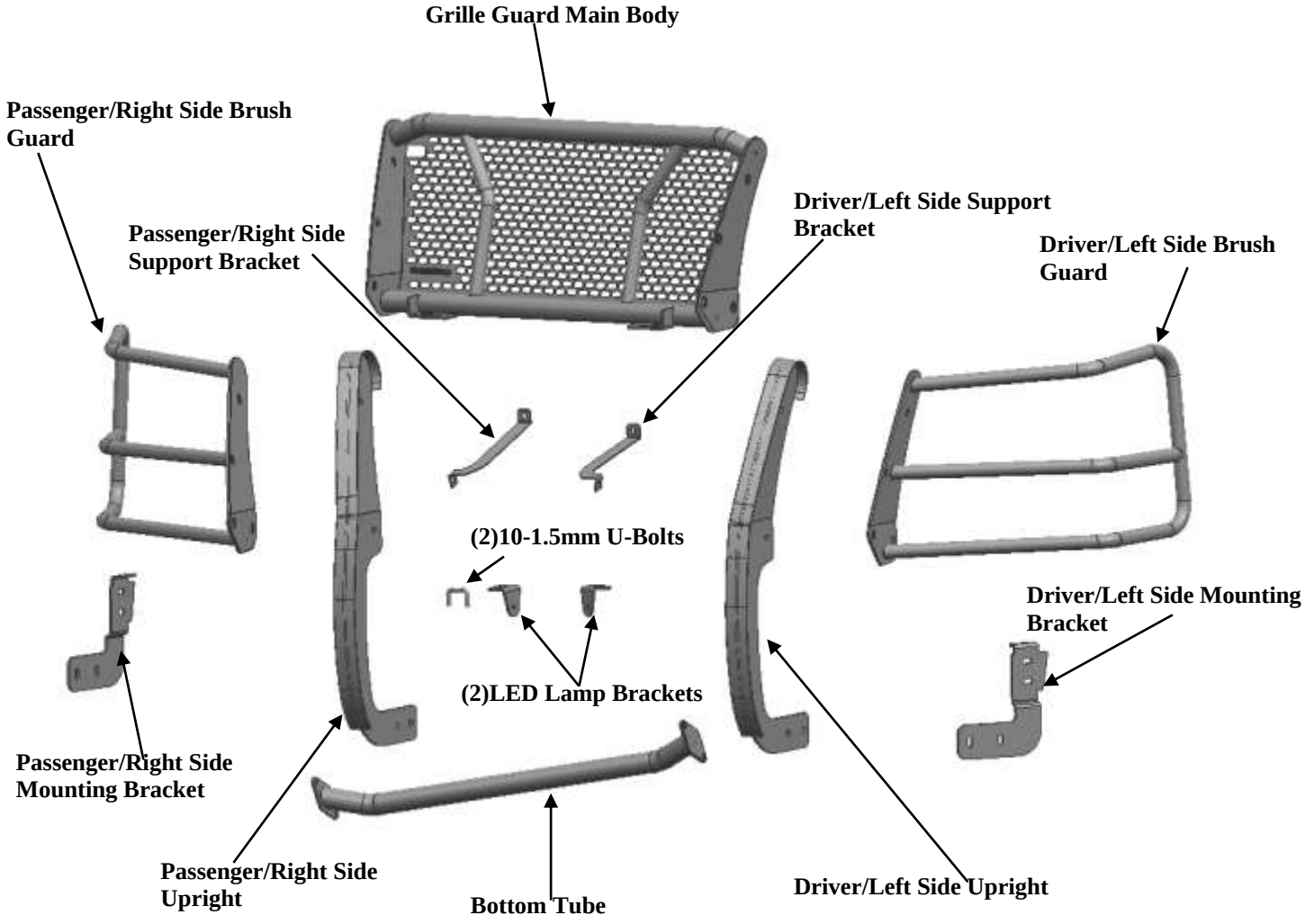

PROCEDURE: REMOVE CONTENTS FROM BOX. VERIFY ALL PARTS ARE PRESENT. READ INSTRUCTIONS CAREFULLY BEFORE STARTING INSTALLATION. DRILLING IS REQUIRED. ASSISTANCE IS RECOMMENDED.

1. Undercar air dam needs to be removed before installing grille guard and cannot be reinstalled unless the air dam is trimmed **(Figure 1&2)**.Approximate trimming locations for the air dam if end-user wants to keep it.**(Figure 3)**.
2. Top plastic grille cover needs to be removed before installing grille guard, but it can be reinstalled afterwards.**(Figure 4).** The two 6mm bolts that face upwards connect to the intake manifold duct. Once those are removed, the installer will need to shift it aside and gently shimmy the plastic cover out while feeding the hood latch through its opening. The OE bolts will need to be replaced with the provided 6-1.00mm bolts in the kit. **(Figure 5&6)**
3. Starting on the Driver/Left Side of the vehicle. **(Figure 7)**
4. Move to the mounting location. Select the 10-1.5mm U-Bolt **(Figure 8)**. Insert the U-Bolt into the oval hole in the floor. Attach the Driver/Left Side Mounting Bracket to the U-Bolt with (2) PVC Plastic Retainers φ10(δ0.7*40*40), (2) 10mm x 24mm x 2.2mm Flat Washers , (2) 10mm Lock Washer and (2) 10-1.5mm Hex Nuts, **(Figure 9&11**). It is highly recommended that the installer fully tightens the U-bolts and mounting brackets to the frame before attaching the grille guard. Due to the nature of the U-bolt, the bracket will tend to slide around on the side of the frame and may cause the grille guard to tilt down, scratching the bumper. **(Figure 10&11**)
5. Repeat Step4 to attach the Passenger/Right Mounting Bracket.
6. Attach the Driver/Left Side Support Bracket with the included (1) 6-1.00mm x 20mm Hex Bolt, (1) 6mm Lock Washer and (1) 6mm x 18mm x 1.6mm Flat Washer **(Figure 12-14**). Repeat this step to attach the Passenger/Right Side Support Bracket.
7. With assistance, position the Driver/Left Side Upright up to the outside of the Driver/Left Side Mounting Bracket. Attach the Driver/Left Side Upright to the Brackets with the included (2) 10-1.5mm x 30mm Hex Bolts, (4) 10mm x 24mm x 2.2mm Flat Washers, (2) 10mm Lock Washers and (2) 10-1.5mm Hex Nuts, **(Figure 15)**. Do not tighten hardware. Repeat this Step for Passenger Side Mounting Bracket installation.
8. Attach the Driver/Left Side Support Bracket to the inside of the Driver/Left Side Upright with the included(1) 10-1.5mm x 40mm Button Head Bolt, (2) 10mm x 24mm x 2.2mm Flat Washers and (1) 10-1.5mm Nylon Lock Nut **(Figures 16 & 17)**. Do not tighten hardware at this time. Repeat Step 8 to attach the Passenger/Right Outer Support Bracket.
9. Attach the Bottom Tube to the inside of the Driver/Left Side Upright with the included(2) 10-1.5mm x 30mm Button Head Bolts, (4) 10mm x 24mm x 2.2mm Flat Washers and (2) 10-1.5mm Nylon Lock Nuts, **(Figures 18)**. Do not tighten hardware at this time. Repeat this Step to attach the Passenger/Right Side Upright.
10. Select the Driver/Left Brush Guard and Driver/Left Side Upright, **(Figure 19)**. Attach the Driver/Left Brush Guard and Driver/Left Side Upright to the outside of the Grille Guard Main Body with the included (4) 10-1.5mm x 40mm Button Head Bolts , (8) 10mm x 24mm x 2.2mm Flat Washers and (4) 10-1.5mm Nylon Lock Nuts. Fully tighten hardware. Repeat this Step to attach the Passenger/Right Brush Guard.
11. **LED Lamp Bracket installation** (light sold separately).
    a. Select (1) LED Lamp Bracket, **(Figure 20)**. Attach the Bracket to the mounting tab on the Grille Guard Main Body with the included (1) 8-1.25mm x 25mm Button Head Bolt, (2) 8mm x 24mm x 2mm Flat Washers and (1) 8mm Nylon Lock Nut. Repeat this Step to install the remaining Bracket. Leave loose at this time.
    b. Use the hardware included with the light or the supplied (1) 8-1.25mm x 16mm Button Head Bolt. (1) 8mm x 24mm x 2mm Flat Washer and (1) 8mm Lock Washer to attach the LED light assembly to the LED Lamp Bracket, **(Figure 20)**. Do not fully tighten hardware at this time.
    c. Follow light manufacturer's instructions to properly wire the light to the electrical system.

d. Adjust light and fully tighten hardware.

12. Do periodic inspections to the installation to make sure that all hardware is secure and tight.

To protect your investment, Do not use any type of polish or wax that may contain abrasives that could damage the finish. Mild soap may be used to clean the Grille Guard

Driver/left Side Installation Pictured

Undercar air dam installed

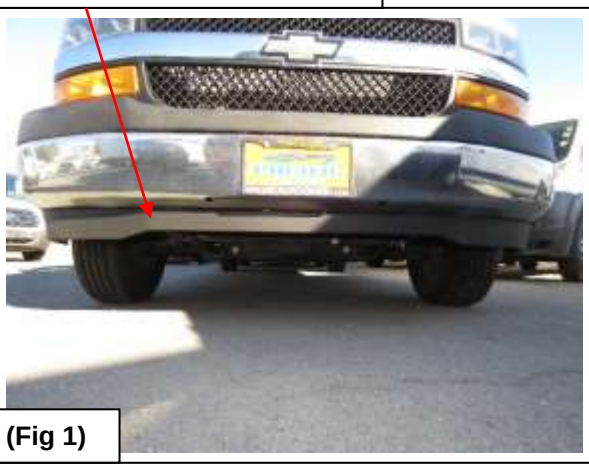

(Fig 1)

Undercar air dam removed

(Fig 2)

Approximate trimming locations for the air dam if end-user wants to keep it.

(Fig 3)

Things that needs to be removed:

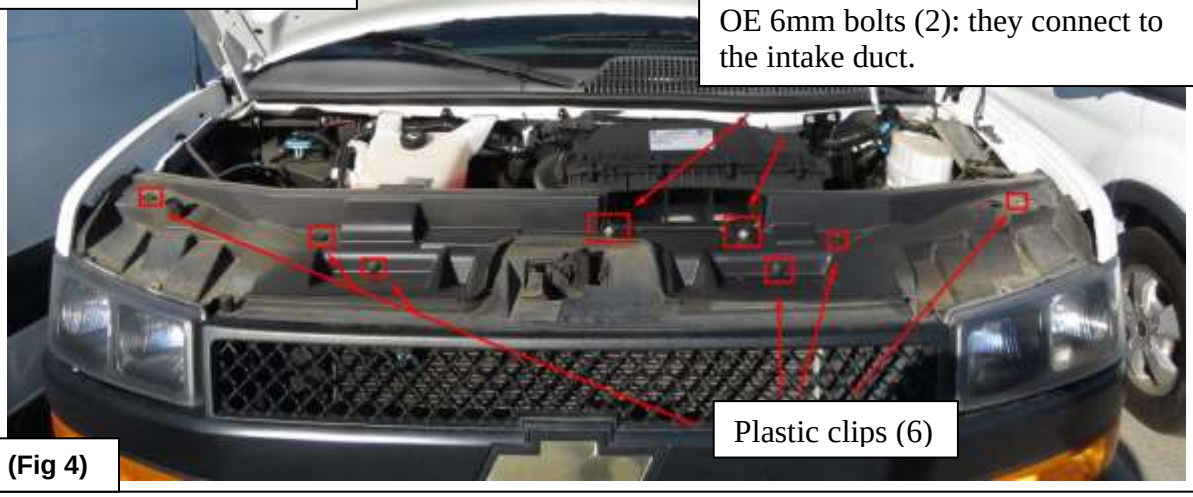

(Fig 4)

Removed OE plastic grille cover

(Fig 5)

Engine compartment with cover

(Fig 6)

The two red squares are the two bolt locations for the support brackets.

Mounting location

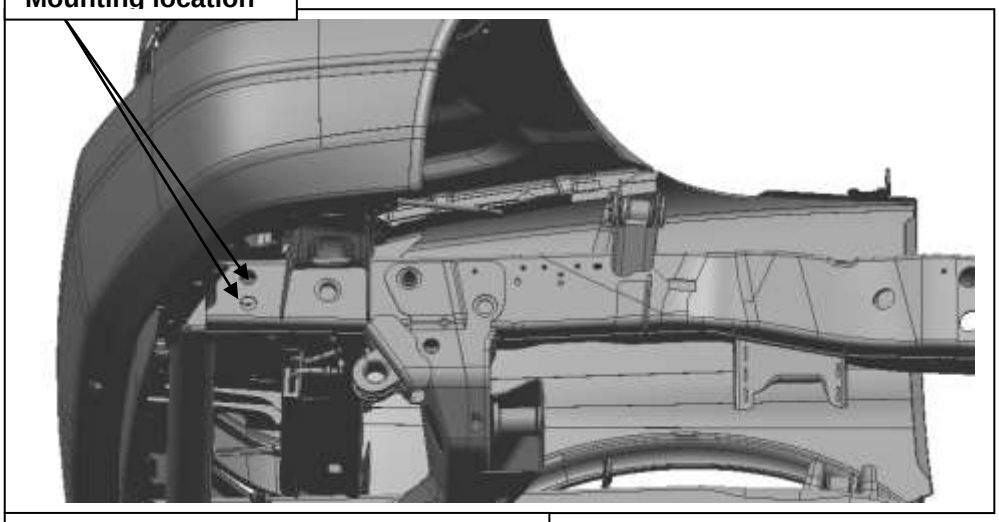

(Fig 7) the driver/left side of the vehicle

(Fig 8) 10-1.5mm U-Bolt

(1) 10-1.5mm U-Bolt
(2) PVC Plastic Retainers φ10 (δ0.7*40*40)
(2) 10mm x 24mm x 2.2mm Flat Washers
(2) 10mm Lock Washer
(2) 10-1.5mm Hex Nuts

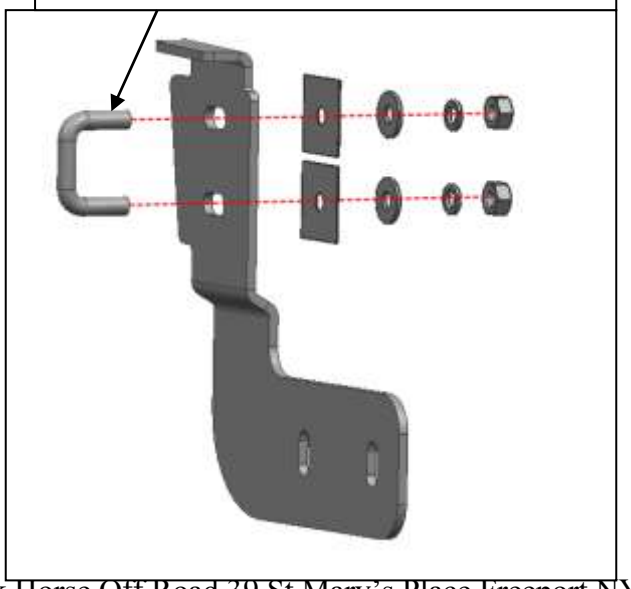

Top of bracket needs to be flat against top of frame.

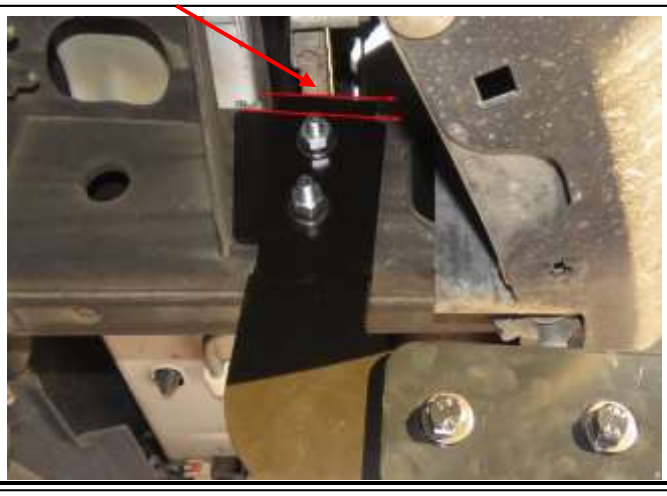

(Fig 9) Attach Driver/Left Side Mounting Bracket to the 10-1.5mm U-Bolt

(Fig 10)

(Fig 11) Attach Driver/Left Side Mounting Bracket to the 10-1.5mm U-Bolt

Mounting location

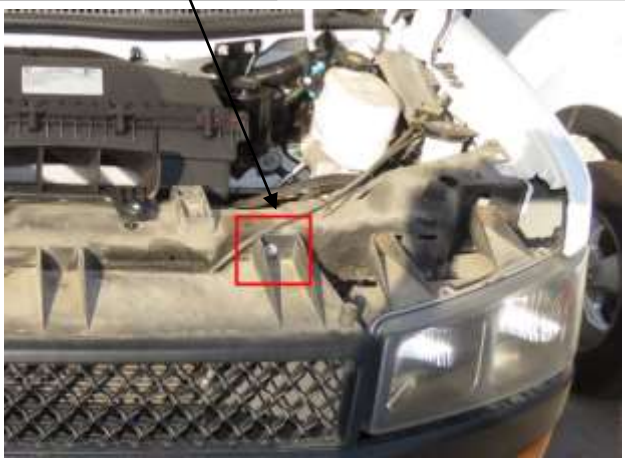

(Fig 12) the driver/left side of the vehicle.

(1) 6-1.00mm x 20mm Hex Bolt
(1) 6mm Lock Washer
(1) 6mm x 18mm x 1.6mm Flat Washer

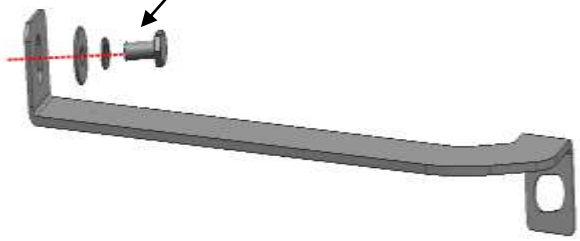

(Fig 13) Attach Driver/Left Side Support

(Fig 14)Attach Driver/Left Side Support Bracket

(2) 10-1.5mm x 30mm Hex Bolts
(4) 10mm x 24mm x 2.2mm Flat Washers
(2) 10mm Lock Washers
(2) 10-1.5mm Hex Nuts

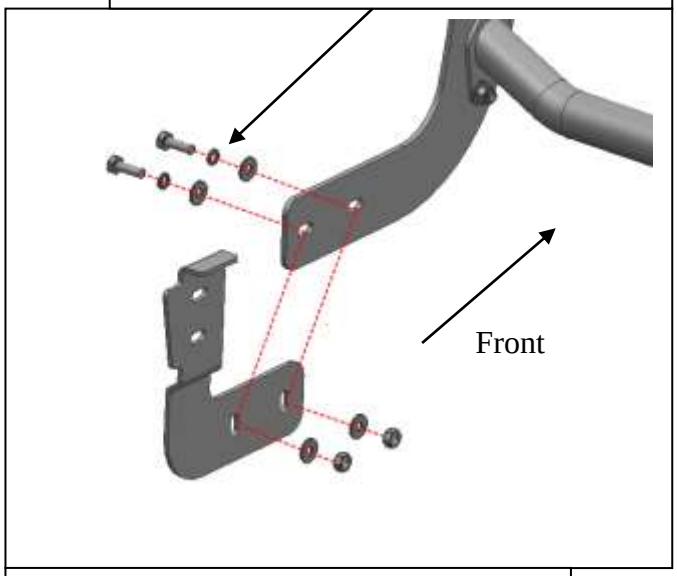

(Fig 15) Attach Driver/Left Side Upright to Driver/Left Side Mounting Bracket

(1) 10-1.5mm x 40mm Button Head Bolt
(2) 10mm x 24mm x 2.2mm Flat Washers
(1) 10-1.5mm Nylon Lock Nut

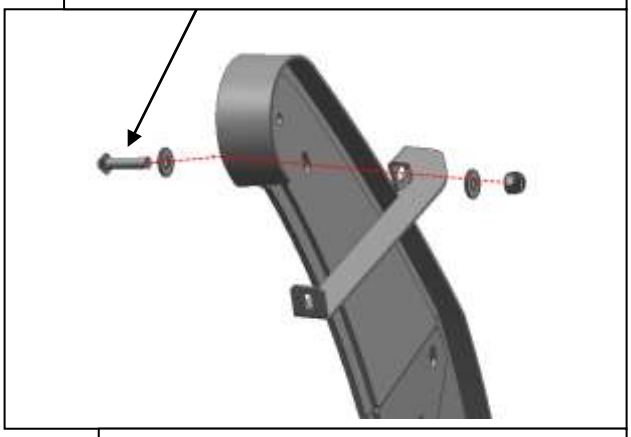

(Fig 16) Attach Driver/Left Side Support Bracket to Upright

(Fig 17) Attach Driver/Left Side Support Bracket to Upright

(2) 10-1.5mm x 30mm Button Head Bolts
(4) 10mm x 24mm x 2.2mm Flat Washers
(2) 10-1.5mm Nylon Lock Nuts

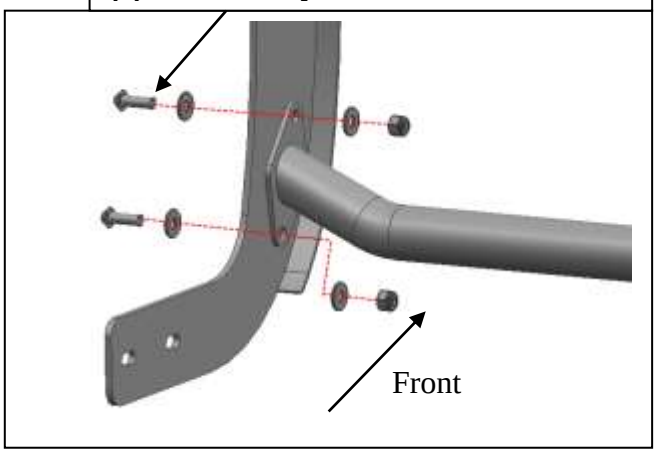

(Fig 18) Bottom Tube installed

(4) 10-1.5mm x 40mm Button Head Bolts
(8) 10mm x 24mm x 2.2mm Flat Washers
(4) 10-1.5mm Nylon Lock Nuts

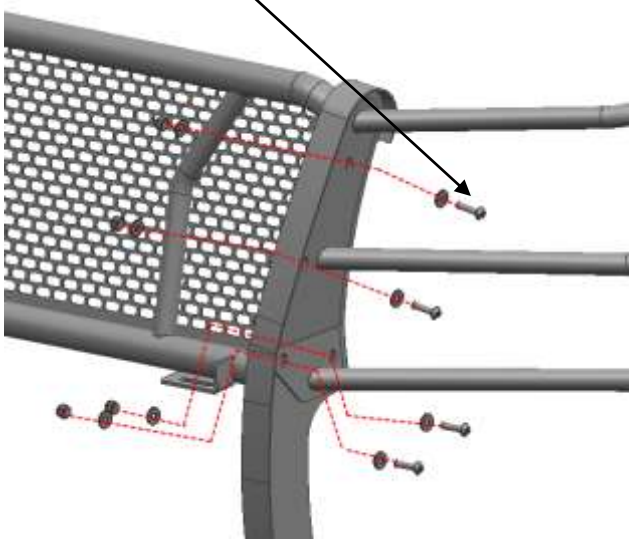

Fig 19) Attach Left Side Upright to Grille Guard Main Body

(1) 8-1.25mm x 25mm Button Head Bolt
(2) 8mm x 24mm x 2mm Flat Washers
(1) 8mm Nylon Lock Nut

(1) 8-1.25mm x 16mm Button Head Bolt
(1) 8mm x 24mm x 2mm Flat Washer
(1) 8mm Lock Washer

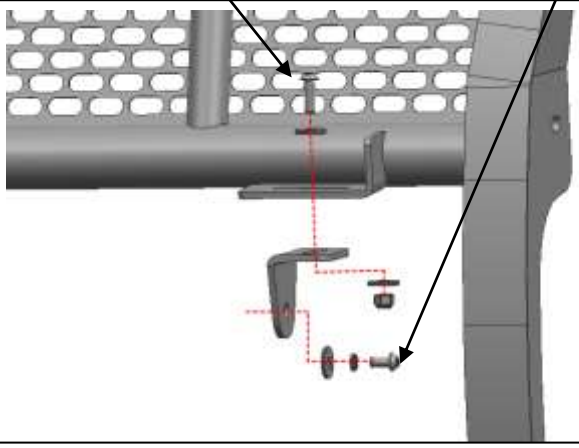

(Fig 20) Attach LED Lamp Bracket to Grille Guard Main Body

Complete Installation