INSTALLATION INSTRUCTIONS

BLACK MODULAR GRILLE GUARD FOR 19-20 DODGE RAM 1500 (Excl. Rebel Trim, 19-20 Ram 1500 Classic and 2020 Ram 1500 Diesel Models)

PART # 17DG111MA

PARTS LIST:

1	Grille Guard	2	14mm x 28mm x 2.5mm Flat Washers
1	Left Wing	4	12-1.75mm x 35mm Hex Bolts
1	Right Wing	8	12mm x 32mm x 3mm Flat Washers
1	Driver/left side Lower Frame Bracket	4	12mm Lock Washers
1	Passenger/right side Lower Frame Bracket	4	12-1.75mm Hex Nuts
1	Driver/left side Front Support Bracket	6	8-1.25mm x 25mm Hex Bolts
1	Passenger/right side Front Support Bracket	24	8mm x 24mm x 2mm Flat Washers
1	Driver/left side Rear Support Bracket	6	8mm Lock Washers
1	Passenger/right side Rear Support Bracket	6	8-1.25mm Hex Nuts
2	50mm x 250mm Adhesive Foam Tapes	6	M8 Hex Lock Nuts
2	12mm x 29mm x 5mm Spacer Washers	1	Allen Wrench S=5
2	14-2.0mm x 35mm Coarse Hex Bolts	6	Button Head Hex Bolt M8-25
2	14mm Lock Washers		

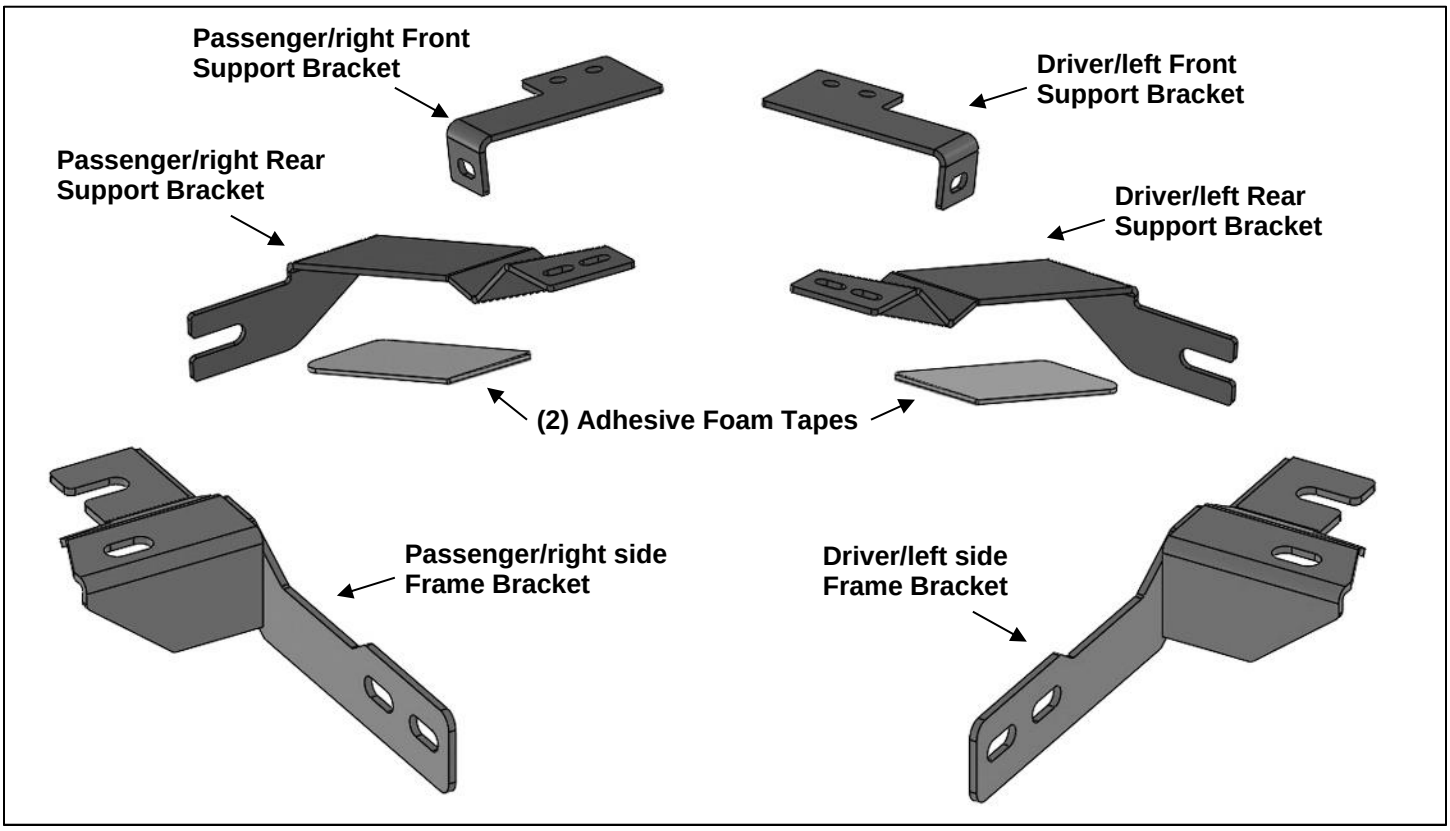

PROCEDURE:

REMOVE CONTENTS FROM BOX. VERIFY ALL PARTS ARE PRESENT. READ INSTRUCTIONS CAREFULLY BEFORE STARTING INSTALLATION.

1. Start installation under the front bumper. Determine if vehicle is equipped with an active air dam system, otherwise continue to **Step 2**. **NOTE:** To make installation easier, temporarily remove the active air dam system. Unplug the active air dam and release the harness from the (2) plastic clips, **(Figure 1)**. Remove the (2) factory flange nuts, per side, attaching the active air dam to the bottom of the frame, **(Figure 2)**. Place the active air dam on stable surface.
2. Locate and remove the center plastic cover, **(Figure 3)**.

3. To install Rear Support Brackets, the front bumper will need to be loosened. Starting on the passenger/right side of the frame, loosen the (3) factory flange nuts holding the bumper to the frame, **(Figure 4)**. Repeat for the driver/left side. **IMPORTANT:** Do not completely remove bumper.
4. Select the Passenger/right Rear Support Bracket, **(Figure 5)**. Apply a layer of Adhesive Foam Tape around the Bracket to protect the finish on the bumper and grille. **IMPORTANT**: To prevent the Brackets from damaging the finish on the vehicle during installation, cover the top of the bumper and bottom of grille with removable tape, (masking tape for example).
5. Starting under the center of the front bumper, **(Figure 6)**, insert the rear end of the Rear Support Bracket up between the lower air dam and the bumper reinforcement brace, **(Figure 7)**. Push the rear end of the Bracket over the upper end of the bumper reinforcement brace, **(Figure 8)**. Pull the Bracket towards the rear of the vehicle, **(Figure 9)**. With the bumper loosened, push down on the plastic trim on the bumper and carefully slide the front of the Bracket out through the opening, **(Figure 10)**.
6. Once the front of the Bracket is through the opening, carefully slide the Bracket towards the passenger/right side of the frame, **(Figures 11 & 12)**. Select (1) 12mm x 29mm x 5mm Spacer Washer. Temporarily remove the top inner factory flange nut from the passenger/right side of the frame. Slide the Spacer Washer over the stud on the frame, **(Figure 12)**. Next, align the open-ended slot on the Bracket to the frame stud. Use the factory flange nut to attach the Bracket to the frame, **(Figure 13)**. Leave factory hardware loose at this time.
7. Repeat **Steps 4—6** to install the Driver/left side Rear Support Bracket.
8. Select the Passenger/right Front Support Bracket. Attach the Bracket to the top of the Passenger/right Rear Support Bracket using (2) 8mm Hex Bolts, (4) 8mm Flat Washers, (2) 8mm Lock Washers and (2) 8mm Hex Nuts, **(Figures 14 & 15)**. Do not tighten hardware at this time.
9. Repeat **Step 8** to install the Driver/left side Front Support Bracket.
10. Determine if vehicle is equipped with tow hooks, **NOTE:** The rear factory bolt cannot be removed, only loosen bolt.
    Vehicles equipped with tow hooks, remove both tow hooks, **(Figure 16)**. **NOTE:** Tow hooks cannot be reinstalled.
    Vehicles without tow hooks, loosen the factory bolts on the bottom of the frame, **(Figure 17)**. Remove the plastic covers blocking openings in bumper.
11. Select the Passenger/right side Lower Frame Bracket. Slide the open-ended slot on the Bracket over the loosened factory bolt. Reuse the factory tow hook bolt or use the provided (1) 14mm Hex Bolt, (1) 14mm Lock Washer and (1) 14mm Flat Washer to attach the Frame Bracket to the threaded hole in the frame, **(Figures 18 & 19)**. Snug but do not fully tighten hardware.
12. Repeat **Step 11** to install the Driver/left side Frame Bracket.
13. Attach Left & Right Wings to Grille Guard using (6) 8mm Hex Lock Nuts，(6) 8mm Button Head Hex Bolt，（12）8mm Flat Washers **(Figures 20).**
14. With assistance, hold the Grille Guard up to the outsides of the Frame and Support Brackets. Attach the Grille Guard Uprights to the Lower Brackets using (4) 12mm Hex Bolts, (8) 12mm Flat Washers, (4) 12mm Lock Washers and (4) 12mm Hex Nuts, **(Figures 21 & 22)**. Attach the Support Brackets to the Grill Guard Uprights using (2) 8mm Hex Bolts, (4) 8mm Flat Washers, (2) 8mm Lock Washers and (2) 8mm Hex Nuts, **(Figure 23 & 24)**.
15. Level and adjust the Grille Guard. Tighten all hardware.
16. Reinstall the center plastic cover and active air dam, if equipped.
17. Do periodic inspections to the installation to make sure that all hardware is secure and tight.

To protect your investment, wax this product after installing. Regular waxing is recommended to add a protective layer over the finish. Do not use any type of polish or wax that may contain abrasives that could damage the finish. Mild soap may be used to clean the Grille Guard.

Passenger/Right Side Installation Pictured

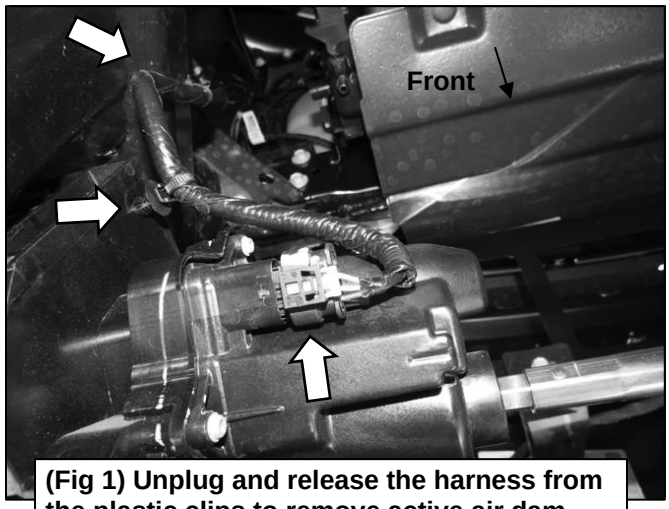

(Fig 1) Unplug and release the harness from the plastic clips to remove active air dam

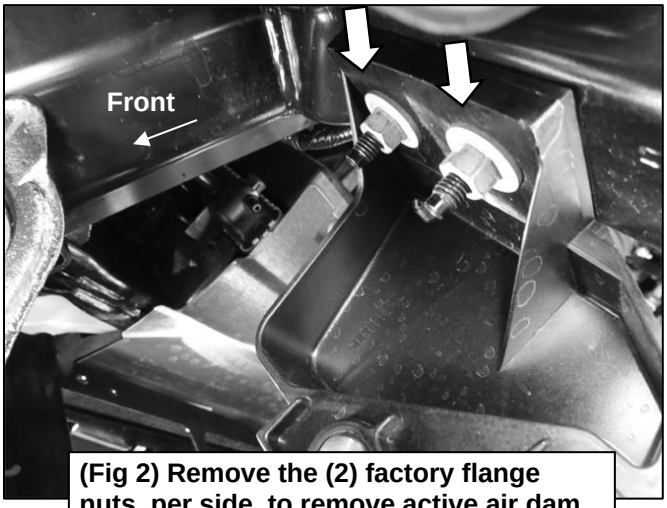

(Fig 2) Remove the (2) factory flange nuts, per side, to remove active air dam

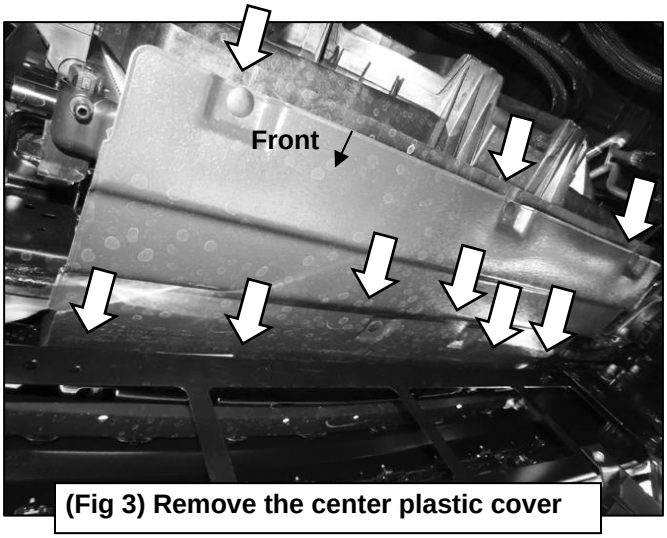

(Fig 3) Remove the center plastic cover

Rear Support Bracket will attach to the top inner stud on the frame

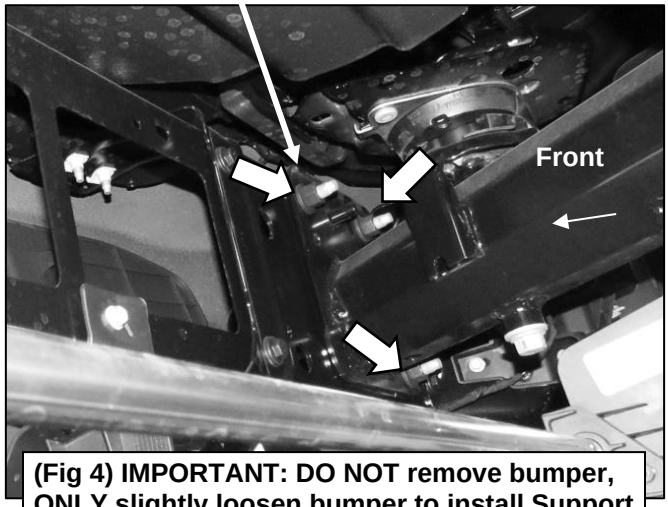

(Fig 4) IMPORTANT: DO NOT remove bumper, ONLY slightly loosen bumper to install Support Brackets. (Passenger/right side frame pictured)

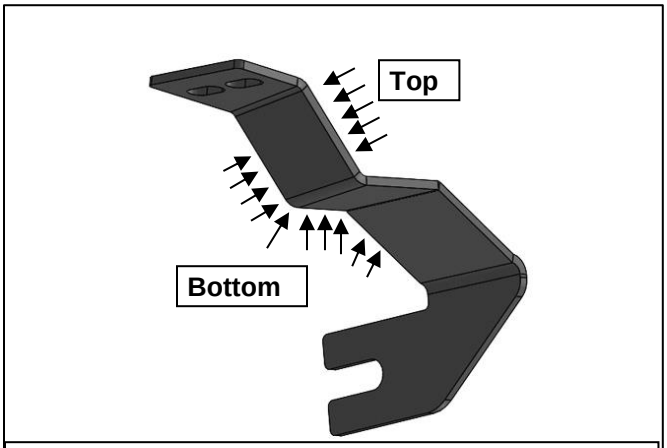

(Fig 5) Passenger/right side Rear Support Bracket (Apply Adhesive Foam Tape to Bracket, arrows)

Passenger/Right Side Installation Pictured

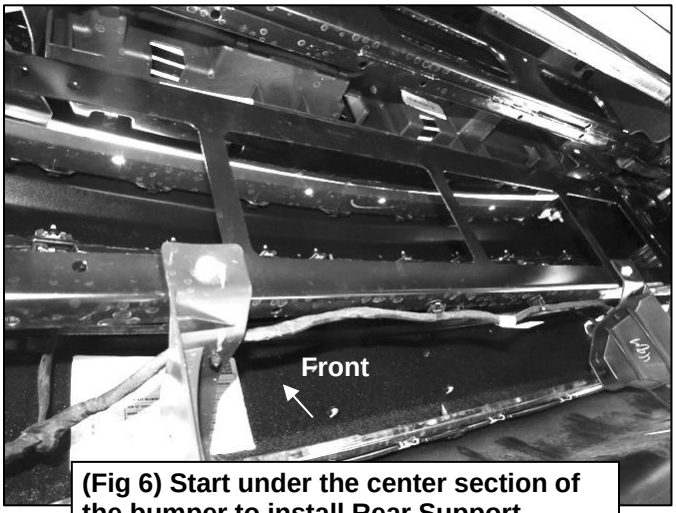

(Fig 6) Start under the center section of the bumper to install Rear Support Bracket, (Pictured from behind bumper)

IMPORTANT: Installing the Rear Support Brackets will require multiple movements of the Bracket to get to the mounting location.

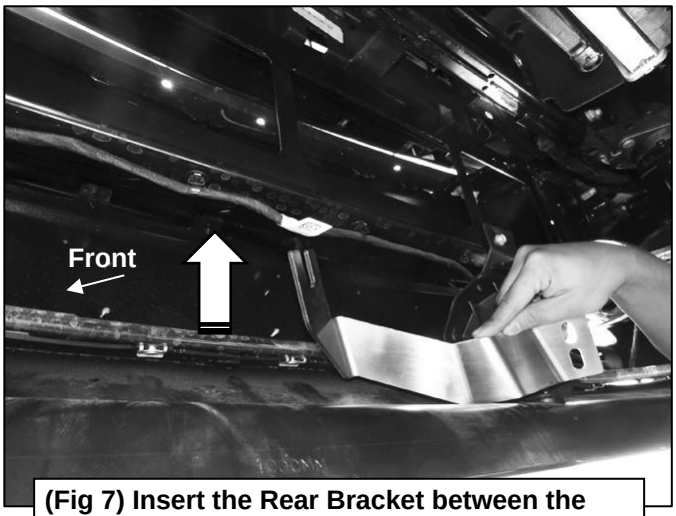

(Fig 7) Insert the Rear Bracket between the lower air dam and frame brace of the bumper

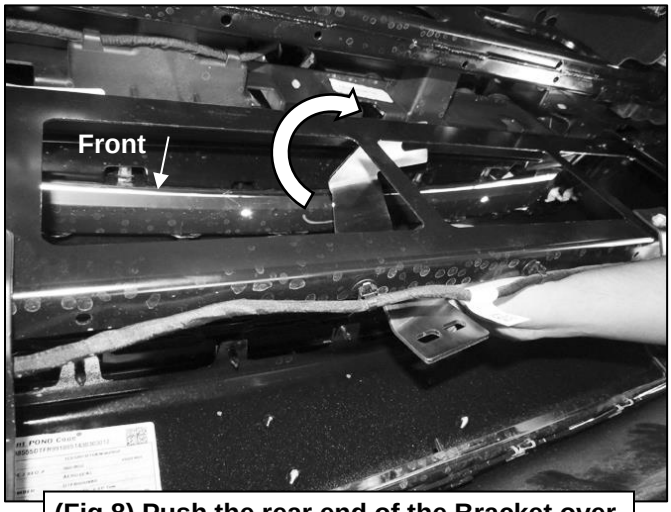

(Fig 8) Push the rear end of the Bracket over the upper bumper reinforcement brace

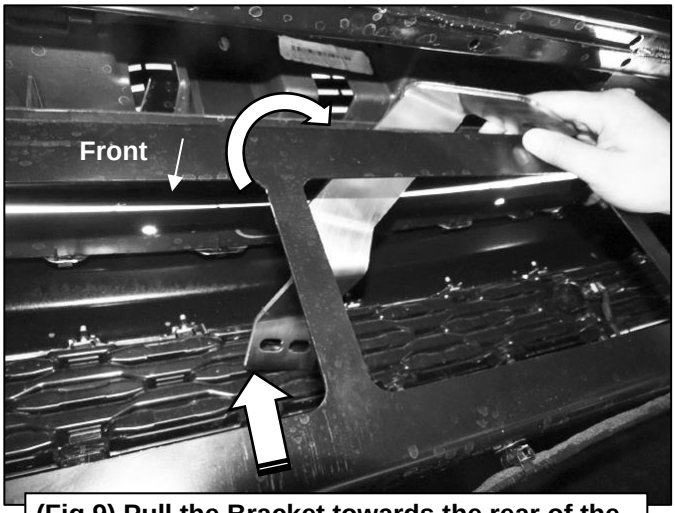

(Fig 9) Pull the Bracket towards the rear of the vehicle and push the front of the Bracket up towards the plastic trim on the bumper

Passenger/Right Side Installation Pictured

IMPORTANT: Bumper might need to be loosened more to fit Bracket into opening. Carefully loosen Bumper but DO NOT remove.

(Fig 10) Push down on the plastic trim on the bumper and carefully slide the front of the Bracket through the opening between the bumper and grille

IMPORTANT: Installing the Rear Support Brackets will require multiple movements of the Bracket to get to the mounting location.

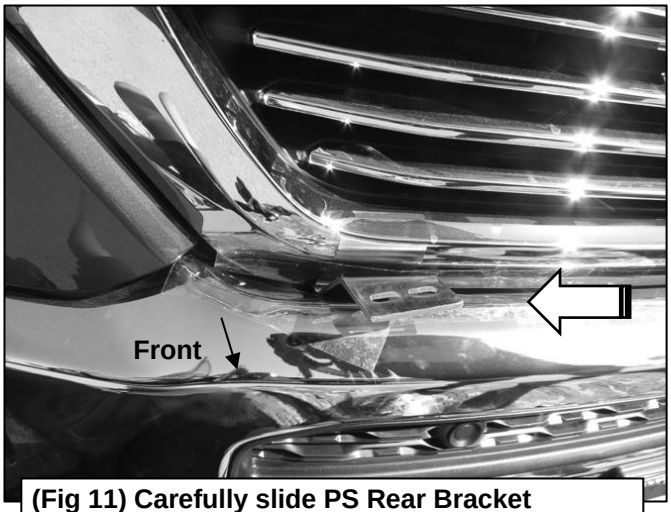

(Fig 11) Carefully slide PS Rear Bracket towards the passenger/right side of the vehicle

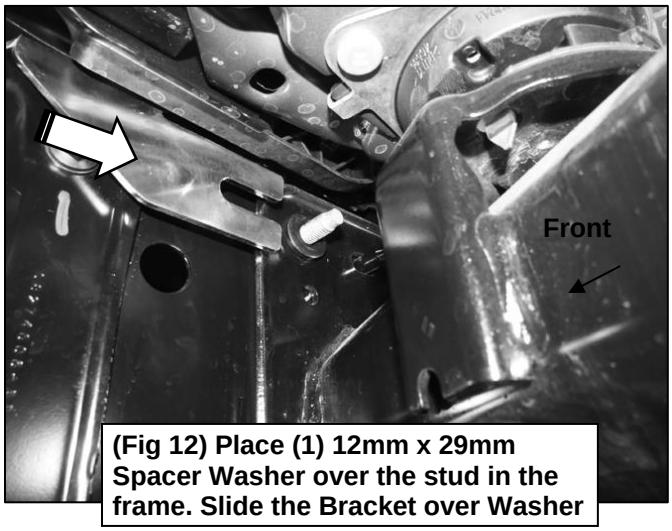

(Fig 12) Place (1) 12mm x 29mm Spacer Washer over the stud in the frame. Slide the Bracket over Washer

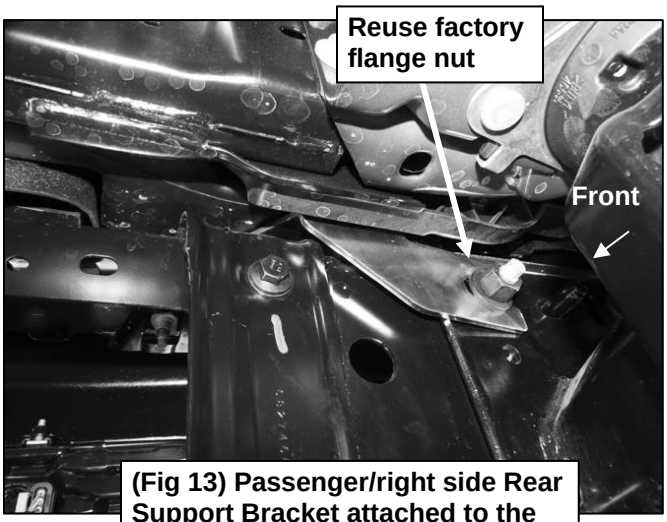

(Fig 13) Passenger/right side Rear Support Bracket attached to the back of the bumper bracket

Passenger/Right Side Installation Pictured

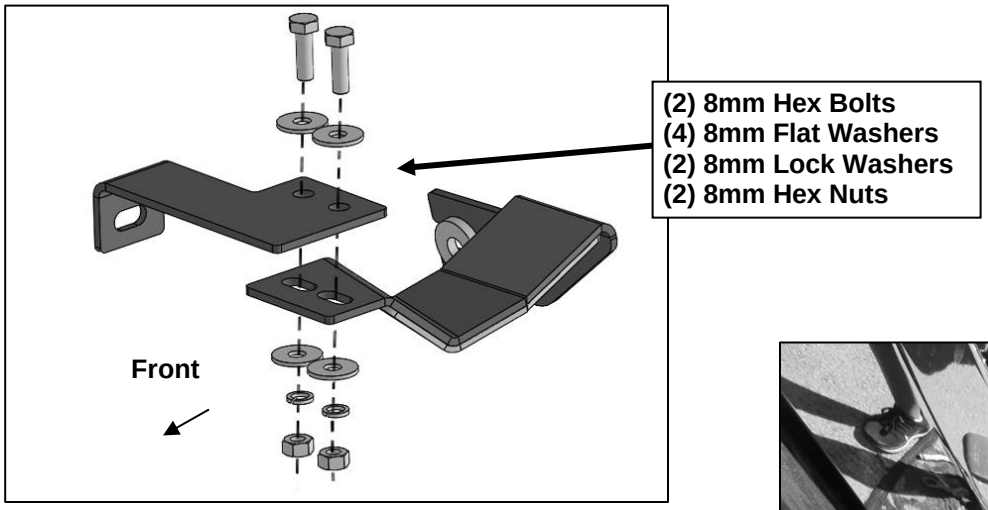

(Fig 14) Passenger/right side Front Support Bracket attached to the top of the Rear Bracket

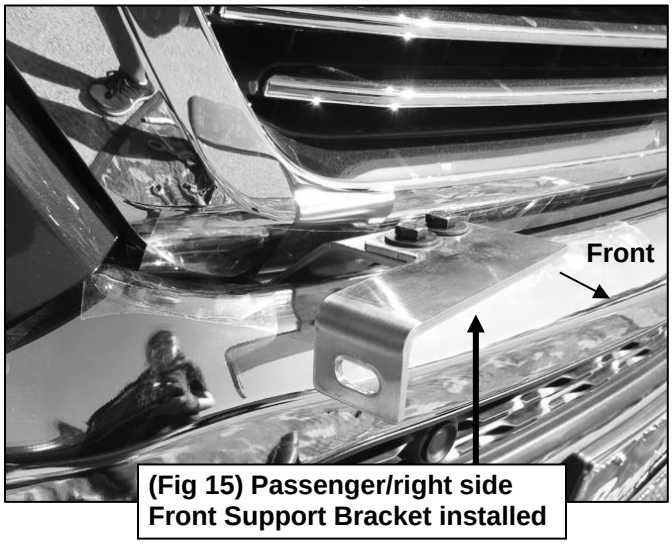

(Fig 15) Passenger/right side Front Support Bracket installed

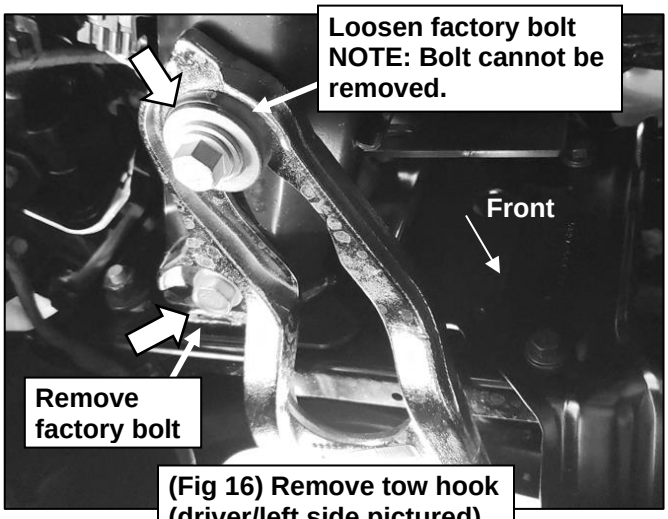

(Fig 16) Remove tow hook (driver/left side pictured)

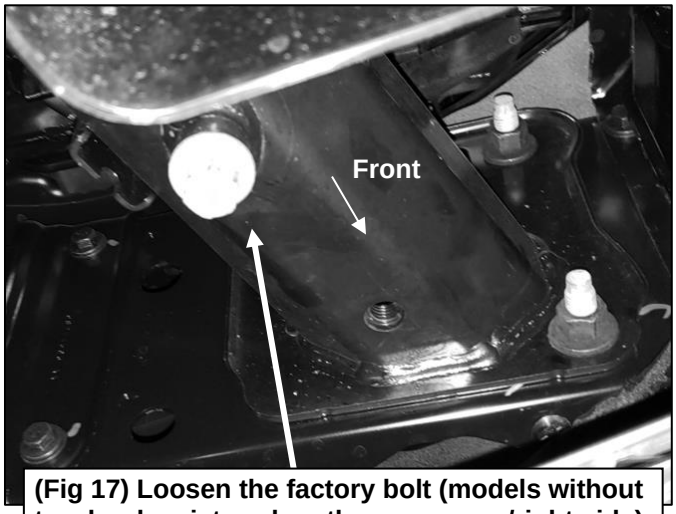

(Fig 17) Loosen the factory bolt (models without tow hooks pictured on the passenger/right side)

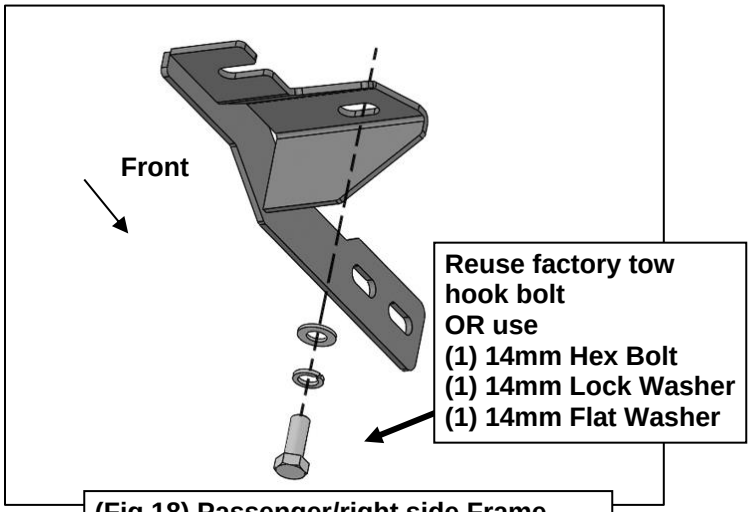

(Fig 18) Passenger/right side Frame Bracket attached to frame illustrated)

Passenger/Right Side Installation Pictured

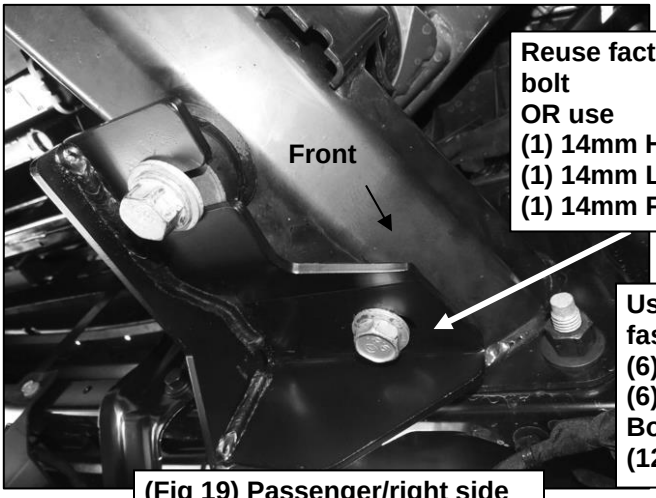

Reuse factory tow hook bolt
OR use
(1) 14mm Hex Bolt
(1) 14mm Lock Washer
(1) 14mm Flat Washer

Use S5 Allen Wrench fasten
(6) M8 Hex Lock Nuts
(6) Button Head Hex Bolt M8
(12) 8mm Flat Washer

(Fig 19) Passenger/right side Frame Bracket installed

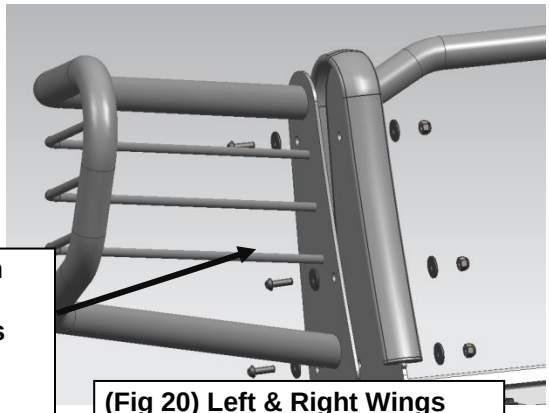

(Fig 20) Left & Right Wings installed

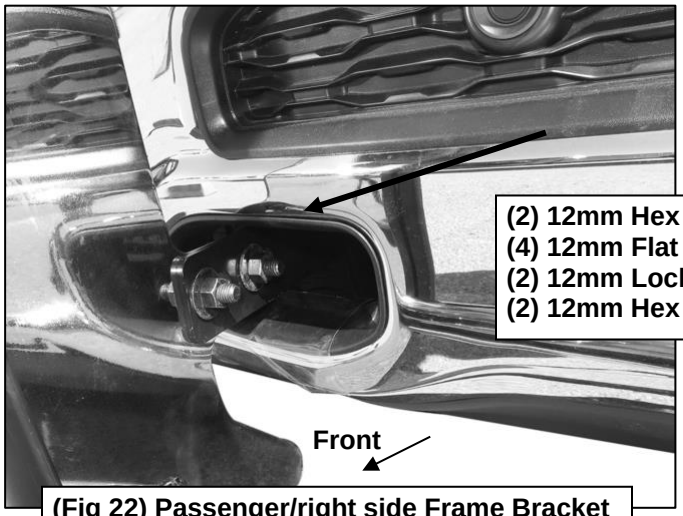

(2) 12mm Hex Bolts
(4) 12mm Flat Washers
(2) 12mm Lock Washers
(2) 12mm Hex Nuts

(Fig 22) Passenger/right side Frame Bracket attached to the inside of the Grille Guard

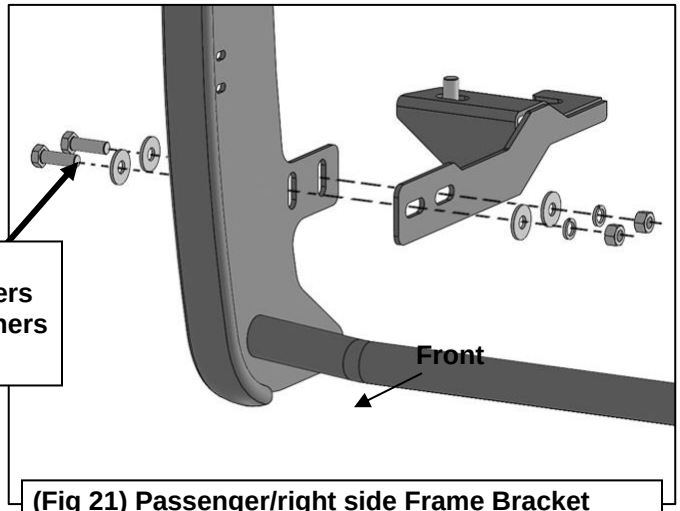

(Fig 21) Passenger/right side Frame Bracket attached to the inside of the Grille Guard Upright

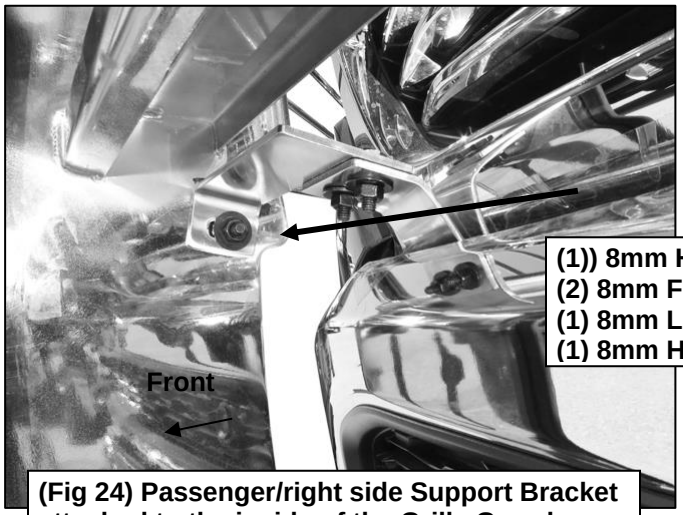

(1)) 8mm Hex Bolt
(2) 8mm Flat Washers
(1) 8mm Lock Washer
(1) 8mm Hex Nut

(Fig 24) Passenger/right side Support Bracket attached to the inside of the Grille Guard

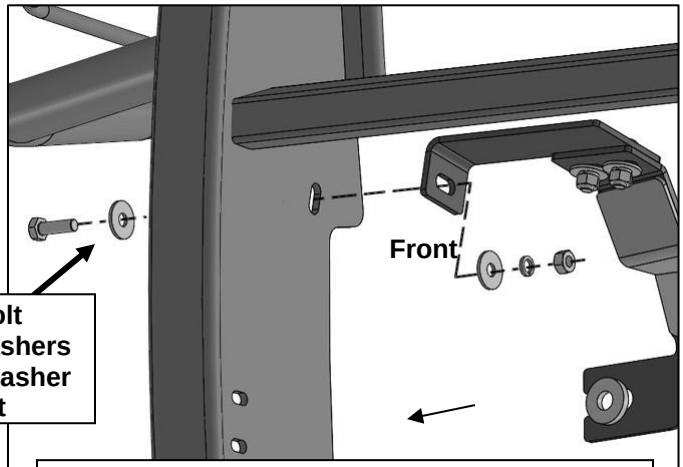

(Fig 23 Passenger/right side Support Bracket attached to the inside of the Grille Guard