BLACK HORSE OFF ROAD®

**TEL : 1-866-XANATOS**

# INSTALLATION INSTRUCTIONS

**ELITE RETRACTABLE POWER BOARD**

**19+ Silverado 1500, 20+ Silverado 2500/3500 HD (Crew and Double Cab)**

**19+ Sierra 1500, 20+ Sierra 2500/3500 HD (Crew and Double Cab)**

**Incl. Diesel models with DEF tanks**

**Patent No. US 11945405**

## PART# PWBR10/PWBR11

# INSTALLATION INSTRUCTIONS

**Mechanical PARTS LIST:**

| Qty | Item Description | Qty | Item Description |
|---|---|---|---|
| 2 | Running Boards (71in or 79in) | 2 | 8mm Plastic Retainers |
| 1 | Driver/Left Front Bracket Assembly | 12 | 8-1.25mm x 30mm Hex Bolts |
| 1 | Passenger/Right Front Bracket Assembly | 14 | 8mm Lock Washers |
| 1 | Driver/Left Rear Bracket Assembly | 14 | 8mm x 24mm x 2mm Flat Washers |
| 1 | Passenger/Right Rear Bracket Assembly | 2 | 8mm Hex Nuts |
| 1 | Electronic Materials Package | 8 | 6mm Flange Nuts |
| 2 | Adhesive Foam 35*100 | 8 | 6-1.0mm x 20mm Carriage Bolts |
| 2 | 8-1.25x40mm Bolt Plates | 15 | Zip Ties |

**Electronic Materials Package PARTS LIST:**

| Qty | Item Description | Qty | Item Description |
|---|---|---|---|
| 1 | Main Harness | 1 | ECU |
| 2 | Wire Taps | 4 | LED lights |
| 1 | LED Y-Harness (280mm) | 1 | LED Y-Harness (1200mm) |

**A**

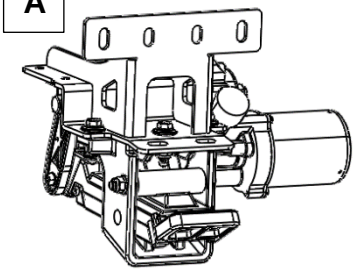

Driver Front Bracket Assembly

**B**

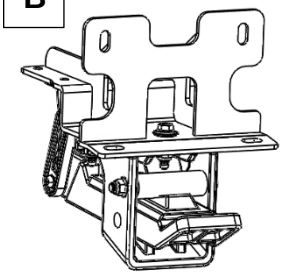

Driver Rear Bracket Assembly

**C**

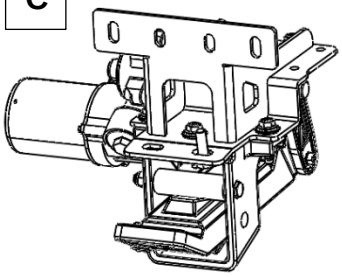

Passenger Front Bracket Assembly

**D**

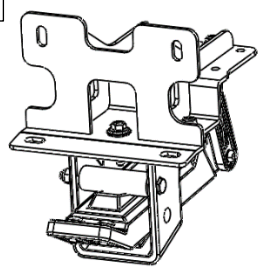

Passenger Rear Bracket Assembly

**E**

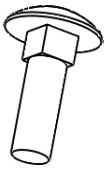

M6 Carriage Bolt

**F**

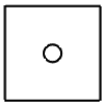

Plastic Insulator

**G**

M6 Flange Nut

**H**

Flat Washer

**I**

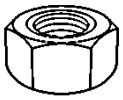

M8 Hex Nut

**J**

M8 Bolt Plate

**K**

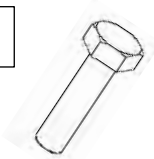

M8 Hex Bolt

**L**

Lock Washer

***NOTE:** Driver and Passenger Rear Bracket Assemblies are the same.

**M**

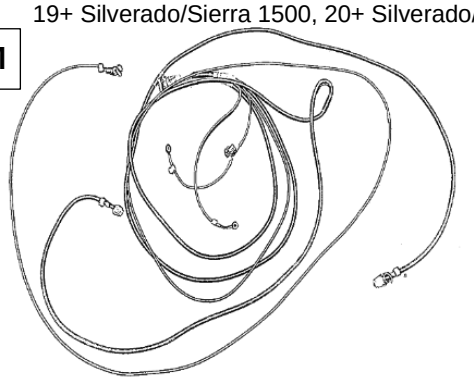

Main Harness

**N1**

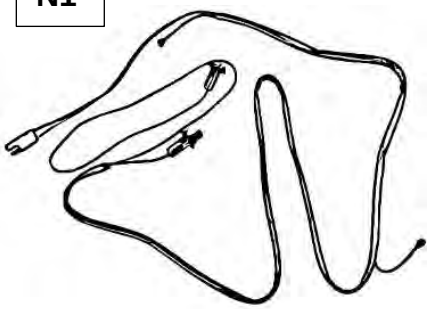

LED Y-Harness (1200mm)

**N2**

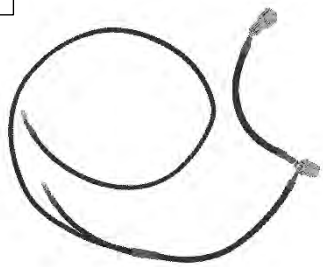

LED Y-Harness (280mm)

**O**

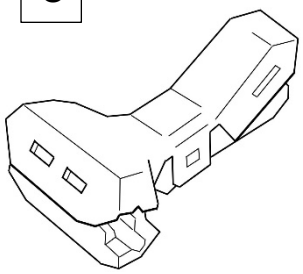

Wire Taps

**P**

ECU

**Q**

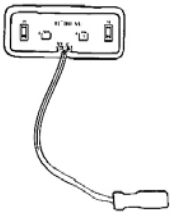

LED Lights

## TOOLS REQUIRED

**Rachet**

**8mm**
**10mm**
**13mm**

**Socket**

**Extensions**

**Wrenches**

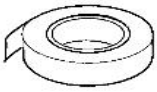

**Electrical Tape**

## 1

Locate Driver Side front mounting points on the rocker panel under the front door. Remove any OE plastic insert caps on the mounting area. Insert the bolt plate (J) into the upper left hole with the bolt threads facing the frame. Use the plastic retainer (F) to keep the bolt plate in place for mounting.

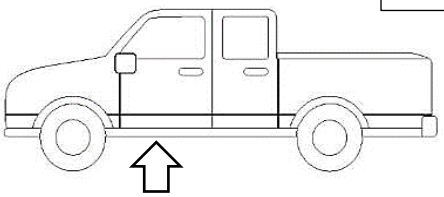

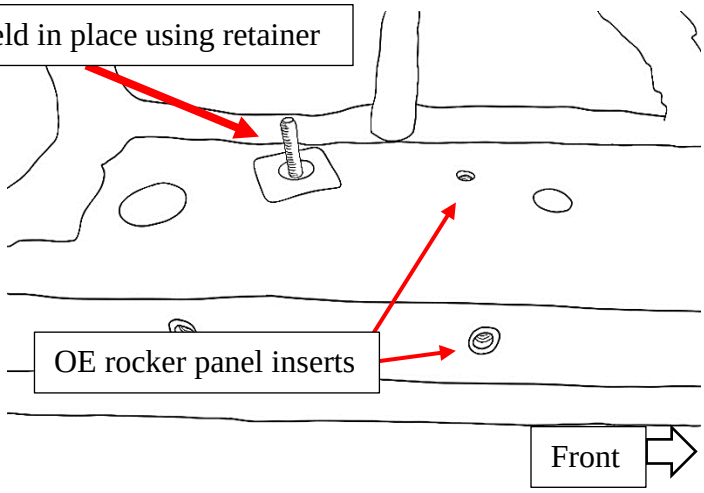


*Note: Pry-tool is recommended for removing plastic insert caps.

## 2

Locate and Line up front mounting bracket slots to the rocker panel threaded inserts and place Driver Side/Left Front Bracket Assembly (A) onto rocker panel. Then fasten 8mm Bolts, Lock Washers, and Flat washers together into the OE inserts and 8mm Hex nut to the bolt plate. Do not tighten all the way yet.

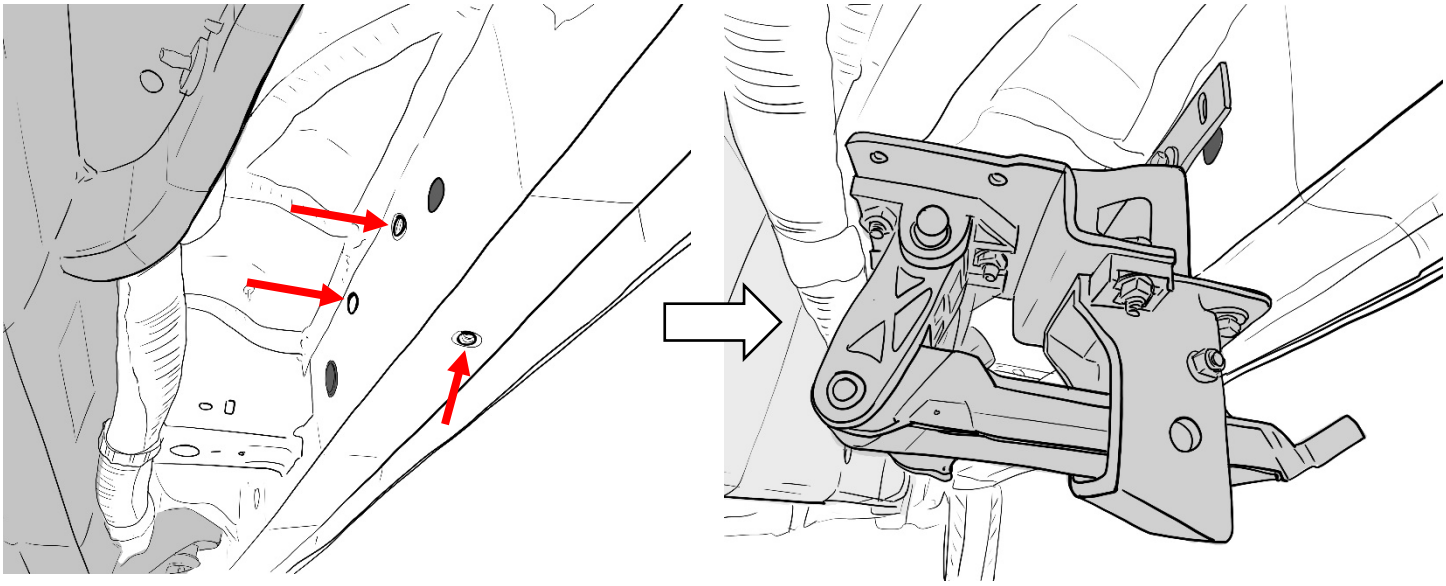

## 3

Locate rear mounting points. Remove the appropriate plastic OE insert protectors to reveal the threaded inserts. Next, line up rear mounting bracket slots to the studs and place Driver Side/Left Rear Bracket Assembly (B) onto rocker panel.

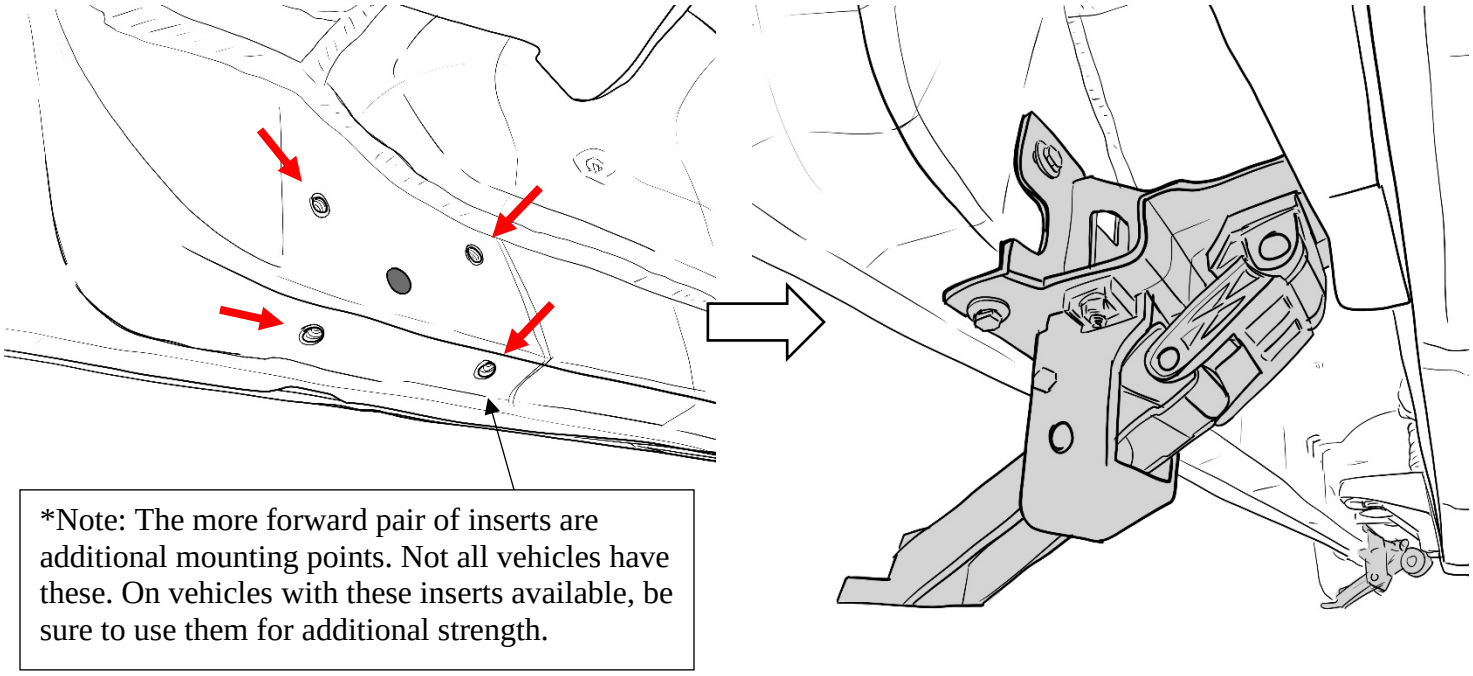

*Note: The more forward pair of inserts are additional mounting points. Not all vehicles have these. On vehicles with these inserts available, be sure to use them for additional strength.

Then fasten the 8mm bolts (K), lock washers (L), and flat washers (H) into. Do not tighten all the way yet.

Repeat steps 1 – 3 for the Passenger Side.

On some vehicles, the Passenger Side has large wire conduits running the length of the vehicle frame. These wire harnesses are bendable and can be simply pushed aside when installing the Passenger Side Bracket Assemblies (C & D). Apply the supplied foam strips to the bracket assemblies as shown below to prevent scratching the outer conduit.

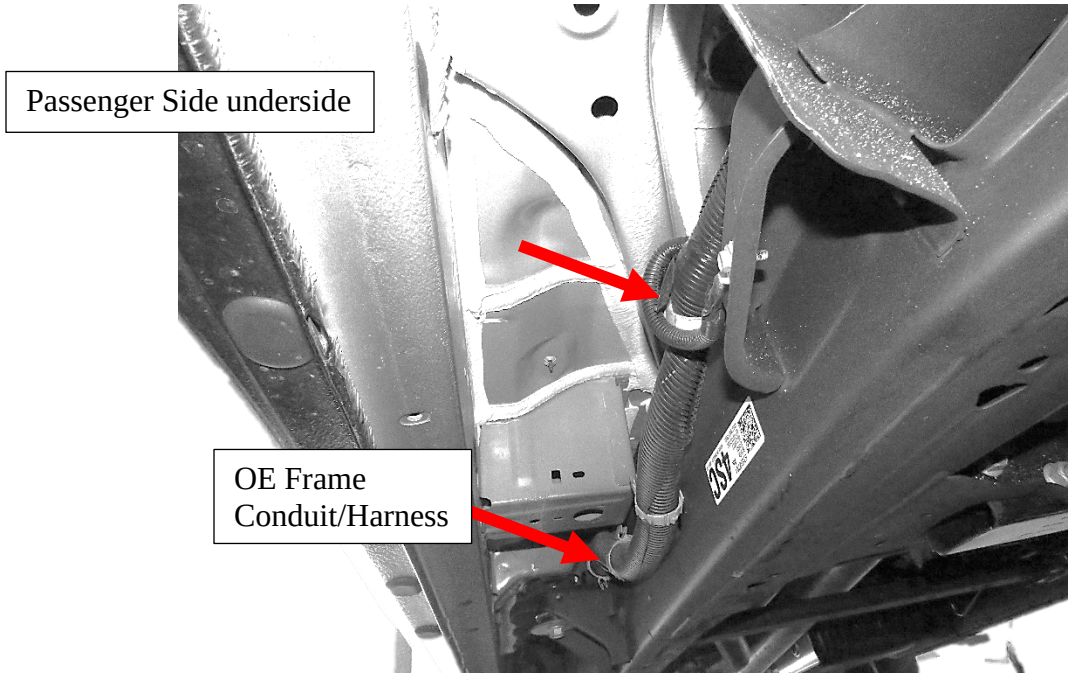


Trim the foam to the appropriate size and apply it to the top of the brackets which will touch the OE frame conduit.

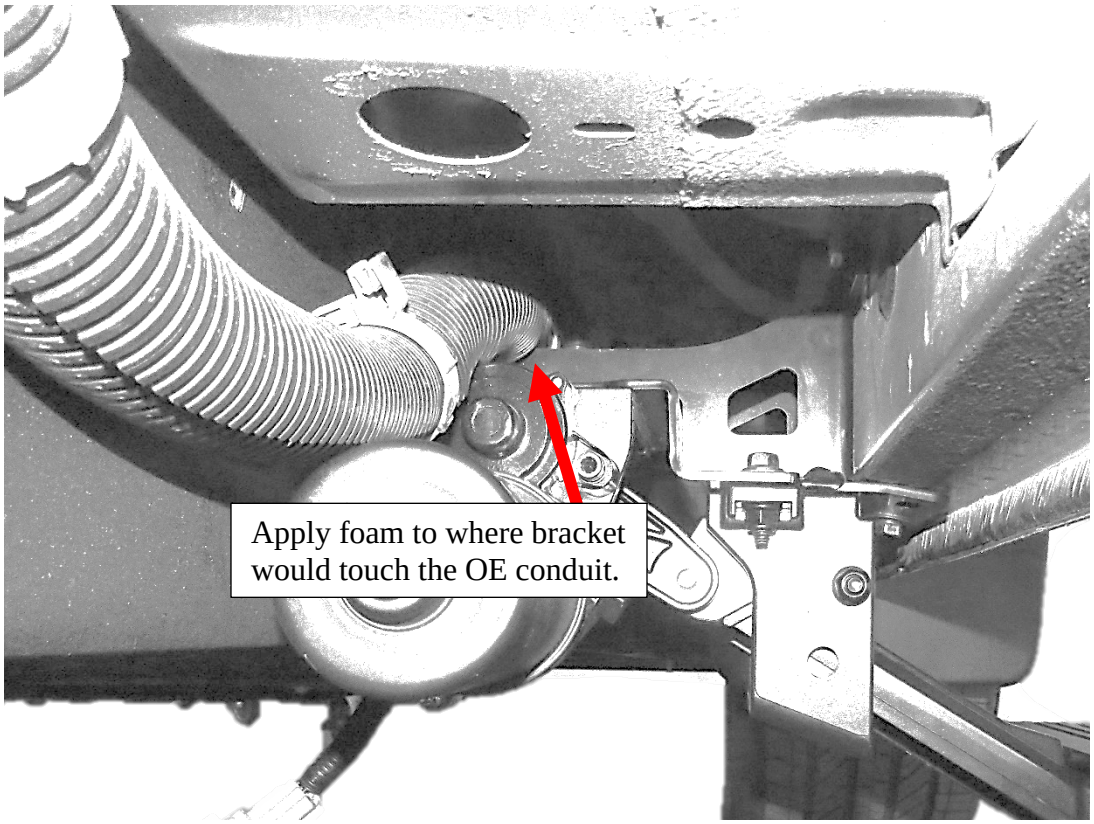

## 5

Start from the engine compartment by opening the front hood of the vehicle. Locate the Battery and its terminals (positive/negative). Remove the 25A fuse from the fuse box that comes with the main harness (M).

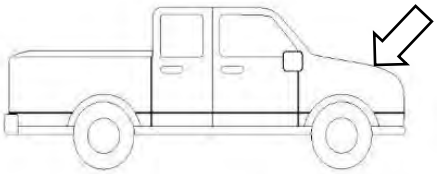

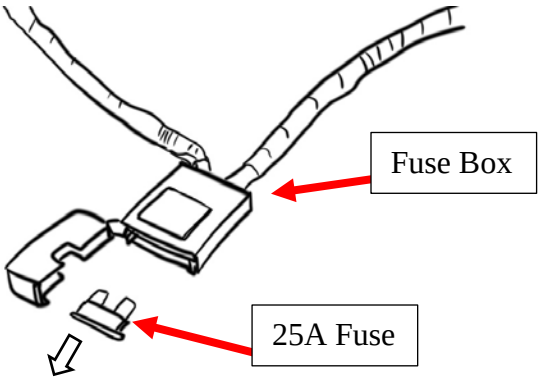


*WARNING: Keeping the fuse connected to the fuse box may result in electrical sparks and risk of shorting when working with the battery.

## 6

Connect the positive power lead on the main harness (M) to the positive battery terminal. Connect the negative lead to the negative battery terminal. Make sure both power leads are fully secured. Connect the ECU (P) to the main harness.
Connect the Long LED Y-Harness (N1) To the Driver-side branch of the main harness.
Connect the Short LED Y-Harness (N2) to the Passenger-side branch of the main harness.

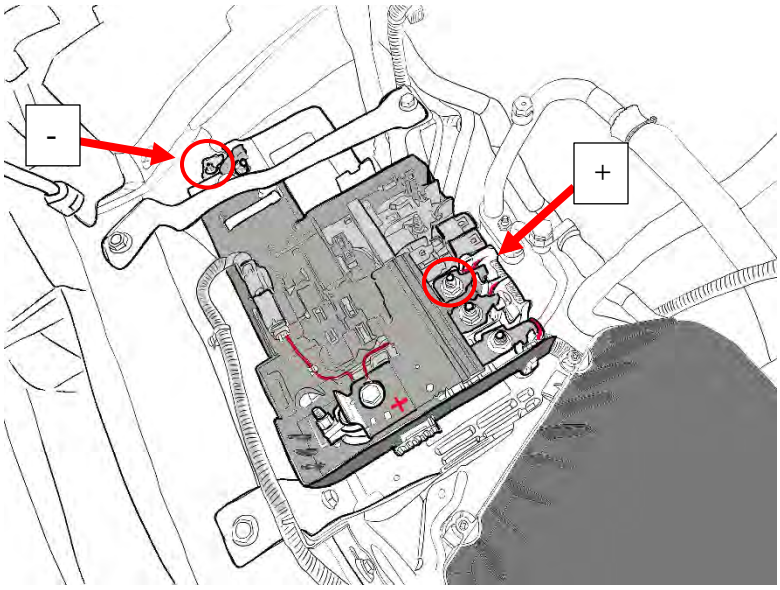


## 7

Route the main harness (M) around the battery, up along the rear of the engine compartment, and down the Driver-side wheel well. Route the shorter leg of the harness down the Passenger-side wheel well. **Be sure to avoid contact with any moving or hot engine components.** Attach and secure the main harness (M) with supplied cable ties.

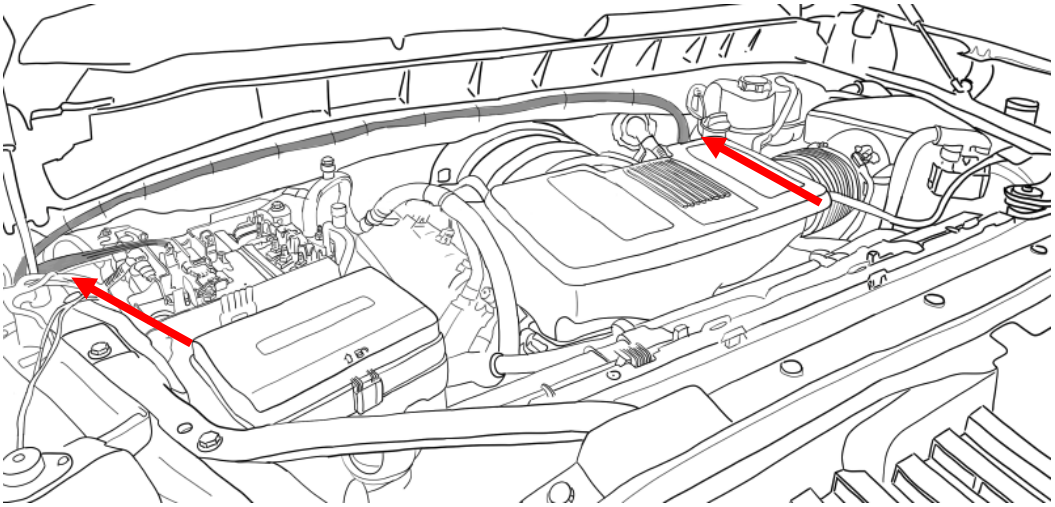

**8**

Inside the vehicle cabin, remove the driver-side front kick panel and bottom door sill plate. Peel back the carpet to access the hole where the grommet was removed. Feed the wires through.

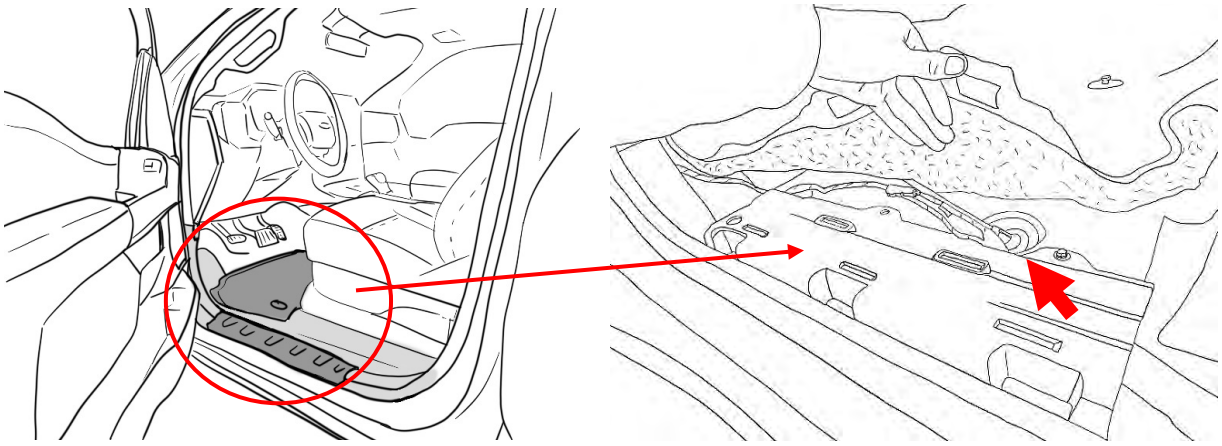

On the underside of the driver side, locate and remove the floor grommet in the floor panel behind the front wheel well. The grommet will be close to the front linkage arm. Poke a hole through the grommet and thread the two signal wires through and up into the vehicle cabin.

---

If the vehicle is a Silverado 1500 from 2022 onwards or a Silverado 2500 from 2024 onwards, route the signal branch of the main harness (M) through the Passenger side instead of the Driver Side. Poke a hole using a drill or punch through the plastic cap on the underside to feed the wires into the cabin.

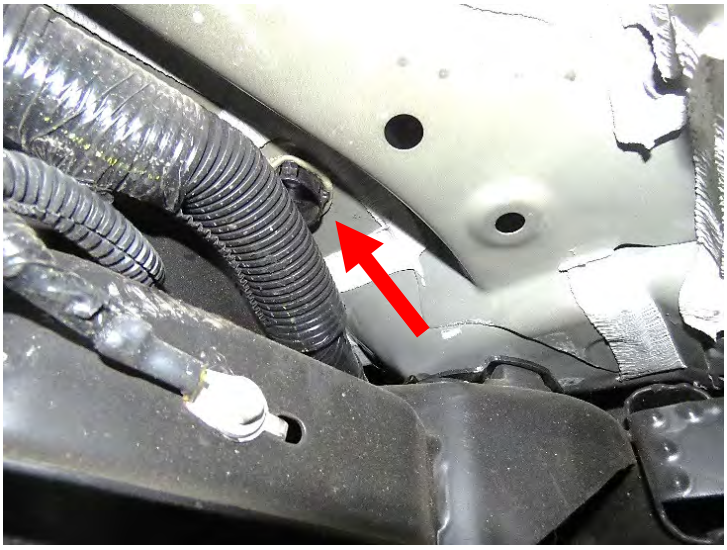

**9**

Attach the main harness (M) to the LED Y-Harness (N). Then attach the LED Y-Harness (N) to the motor on the Driver Side. Repeat for Passenger Side. The shorter LED Y-Harness should connect to the motor that is on the same side as the ECU.

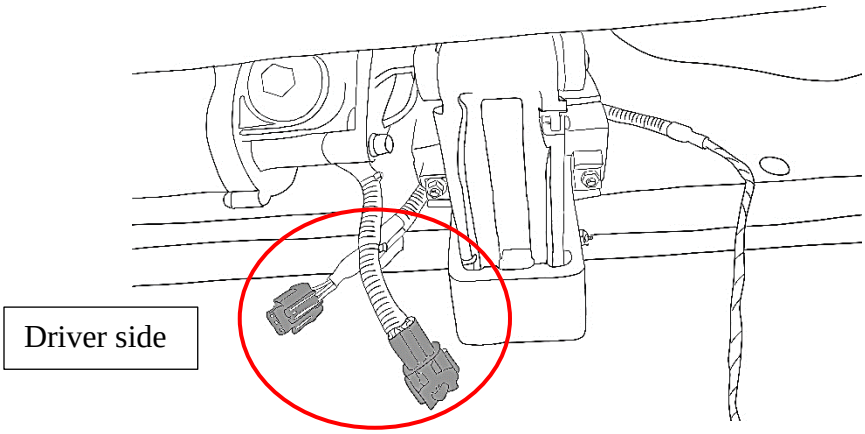


**10**

Determine which technology system the vehicle is normally equipped with using the abridged guide below:

19-21 Silverado/Sierra 1500 & 20-23 Silverado/Sierra 2500-3500 HD = pre-refresh technology system
22+ Silverado/Sierra 1500 & 24+ Silverado/Sierra 2500-3500 HD = post-refresh technology system
22 Silverado 1500 LTD & 22 Sierra 1500 Limited = pre-refresh technology system

If the vehicle is equpiped with a pre-refresh tech system, **follow Step 10A**. If the vehicle is equipped with a post-refresh tech system **follow Step 10B instead (page 9)**.

**PART A:** Confirm the technology system of the vehicle. Locate the OBD-II Port under the steering wheel, near the front hood release lever. Unbolt the two bolts using a socket for easier access to the rear side of the plug.

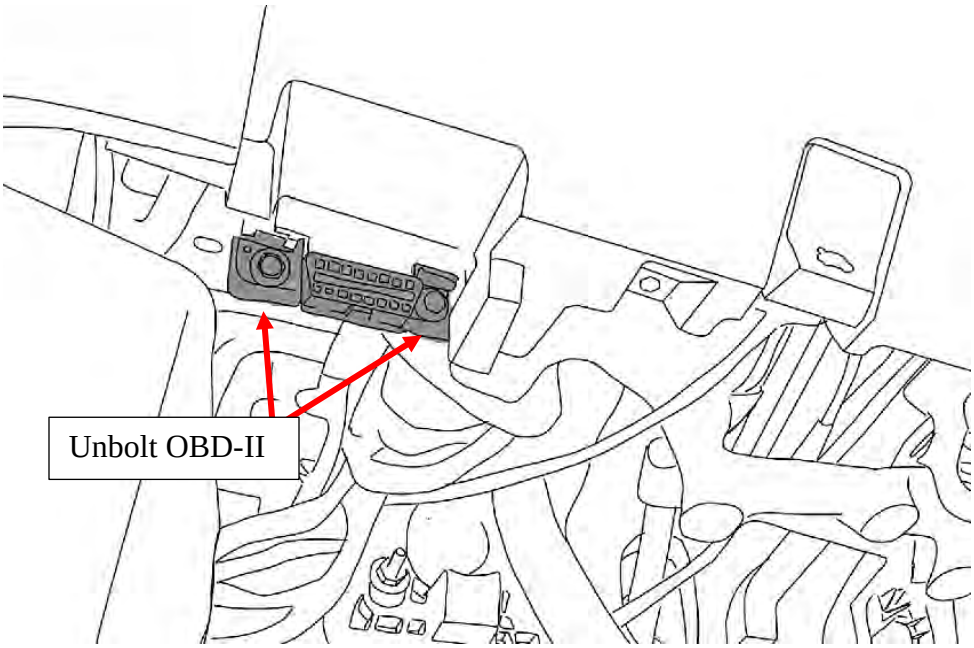

Connect the High and Low wires from the main harness (M) using the supplied wire taps (O). Identify wires from back of the OBD-II Connector.

**OBD-II Connector Pin Layout**

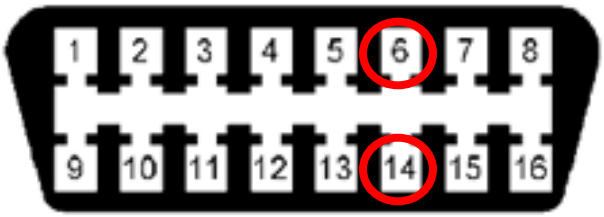


Find and use wire taps on corresponding wires for Pin 6 and 14 on backside of OBD.

Pin 6 = CAN-H
Pin 14 = CAN-L

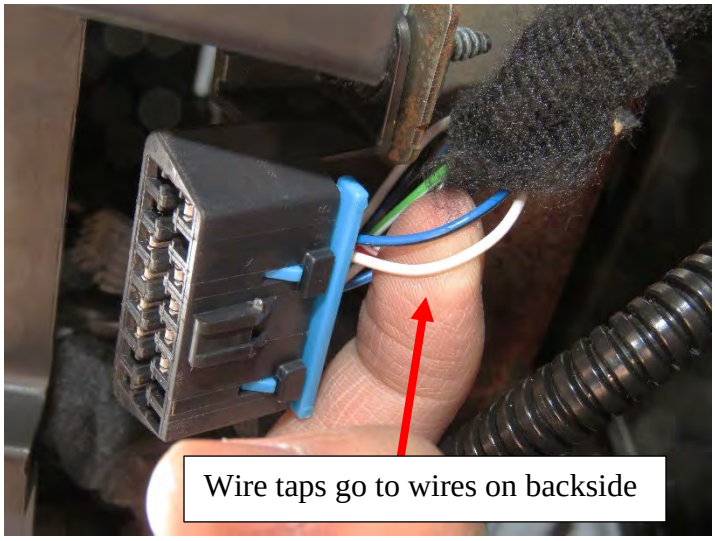


| Factory CAN Wire | Main Harness wire color |
|---|---|
| 3rd from right (lower), Pin 14 | Yellow (Low) |
| 3rd from right (upper), Pin 6 | White (High) |

*NOTE: On some vehicles, wires may have different colors than depicted here.

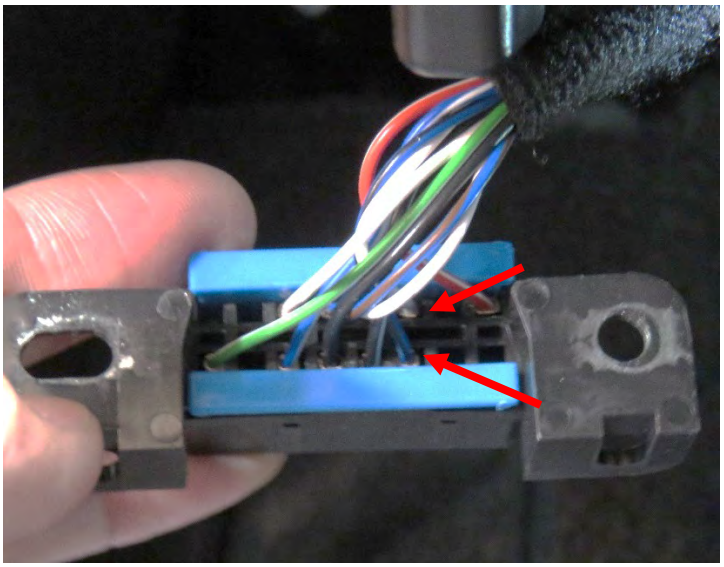

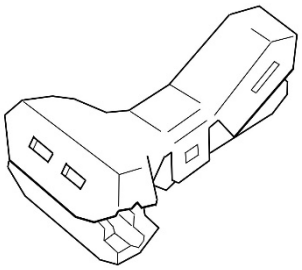

NOTE: Wire taps supplied with kit. Please see next page for guide.

After successfully connecting the wires, return the module back into its place, tighten the previously removed nuts, and check that it is secure on the bracket.

The kit comes supplied with wire taps called “shark taps”. Follow the guide below to tap the wire using the “shark tap”:

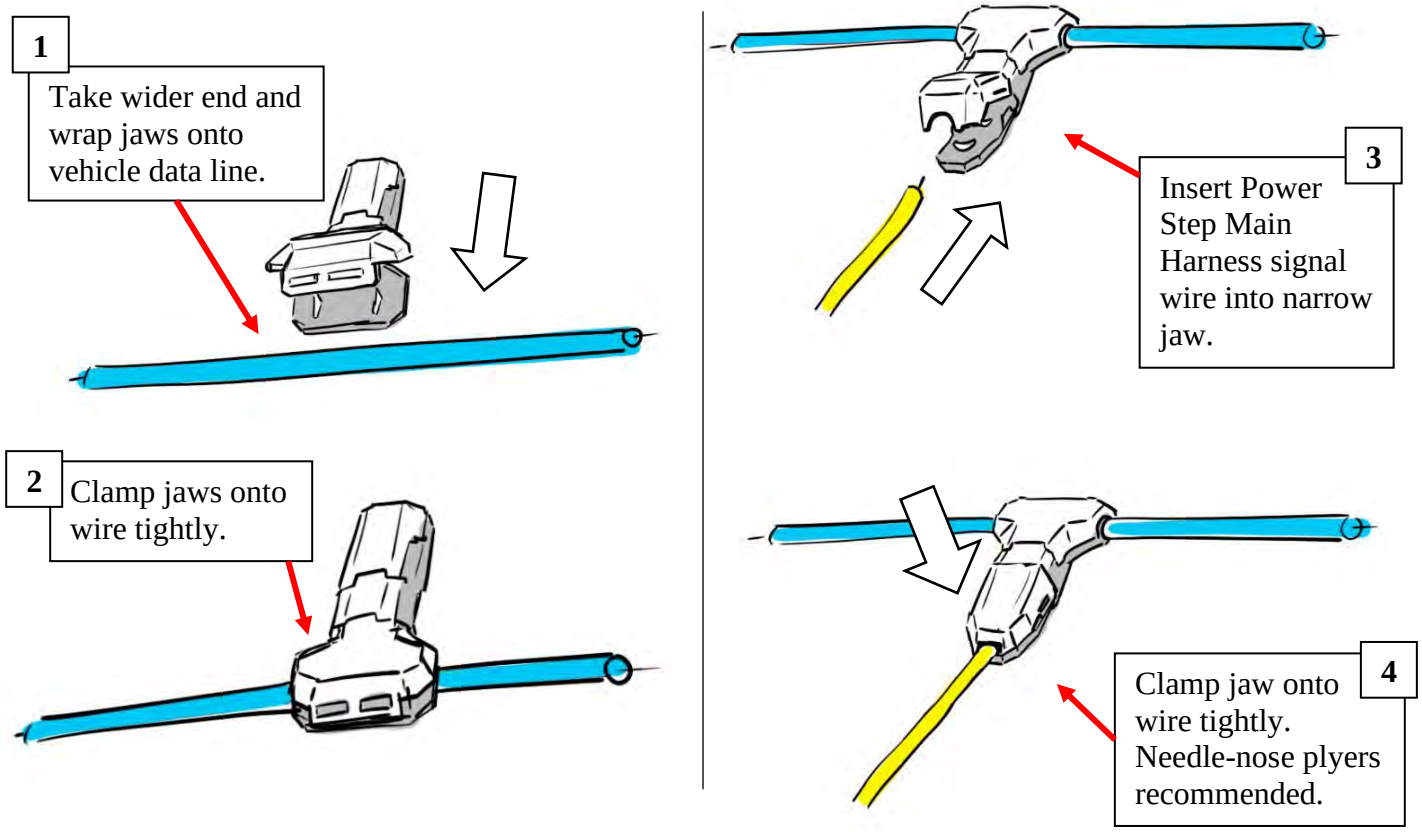


NOTE: Make sure wire is seated properly in the jaws before clamping. The wire being tapped must be centered on the “teeth” to make a proper tap.

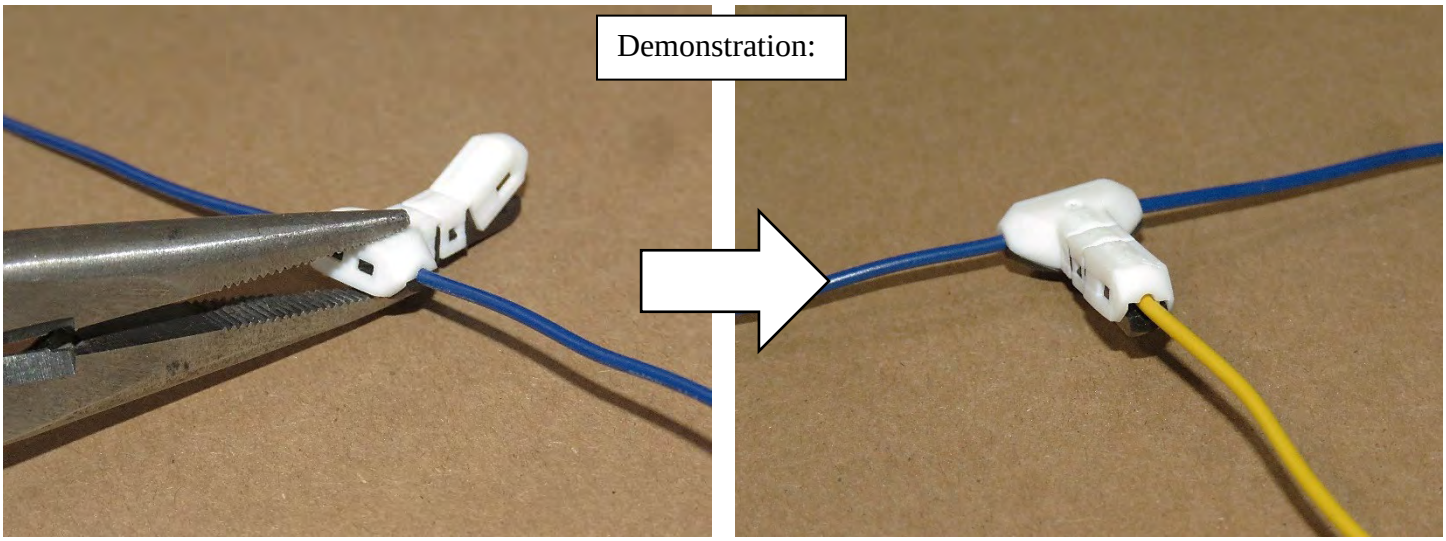

**PART B:** Confirm the technology system of the vehicle. Under the glove compartment on the Passenger Side, locate the radio module. On some models, the underside shield may have to be removed to access the components below the glove compartment.

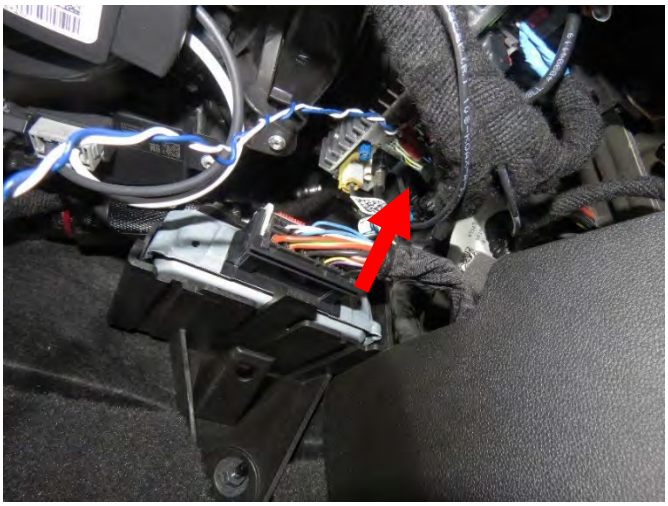

Determine the kind of radio that is installed by looking at the color of the two main connectors that are plugged in.

If your radio has a **GREEN and GREY plug**, then follow **step B-1**.

If your radio has a **BLACK and GREY plug**, follow **step B-2**.

**Part B-1:**

Connect the High and Low wires from the main harness (M) using the supplied wire taps (O). After successfully connecting the wires, return the module back into its place, tighten the previously removed nuts, and check that it is secure on the bracket.

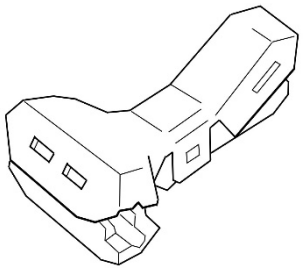

NOTE: Wire taps supplied with kit. Please see page 9 for guide.

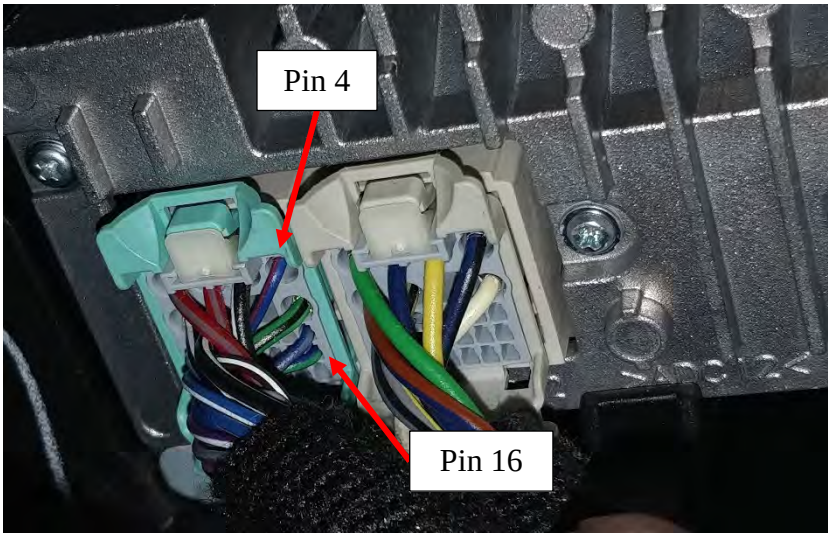


*NOTE: On some vehicles, the positions of the Green and Grey plugs may be reversed.

| Factory CAN Wire | Main Harness wire color |
|---|---|
| Blue w/ White Stripe (CAN-H) | White (High) |
| Blue w/ Yellow Stripe (CAN-L) | Yellow (Low) |

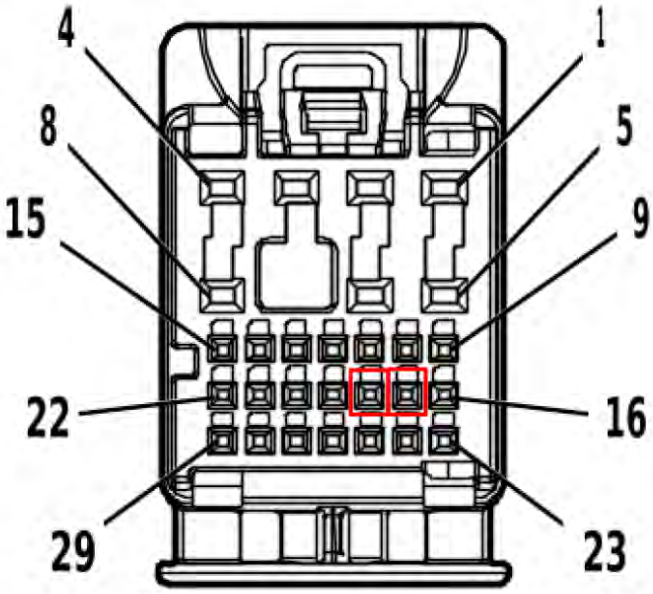


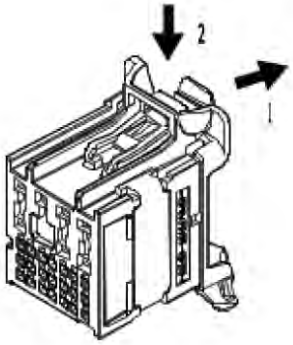


Pin 17 = High
Pin 18 = Low

After successfully connecting the wires, return the module back into its place, tighten the previously removed nuts, and check that it is secure on the bracket.

**Part B-2:**

Connect the High and Low wires from the main harness (M) using the supplied wire taps (O). After successfully connecting the wires, return the module back into its place, tighten the previously removed nuts, and check that it is secure on the bracket.

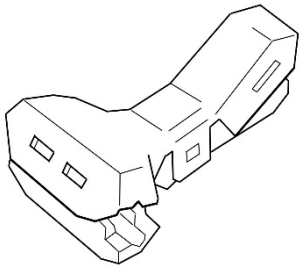

NOTE: Wire taps supplied with kit. Please see page 9 for guide.

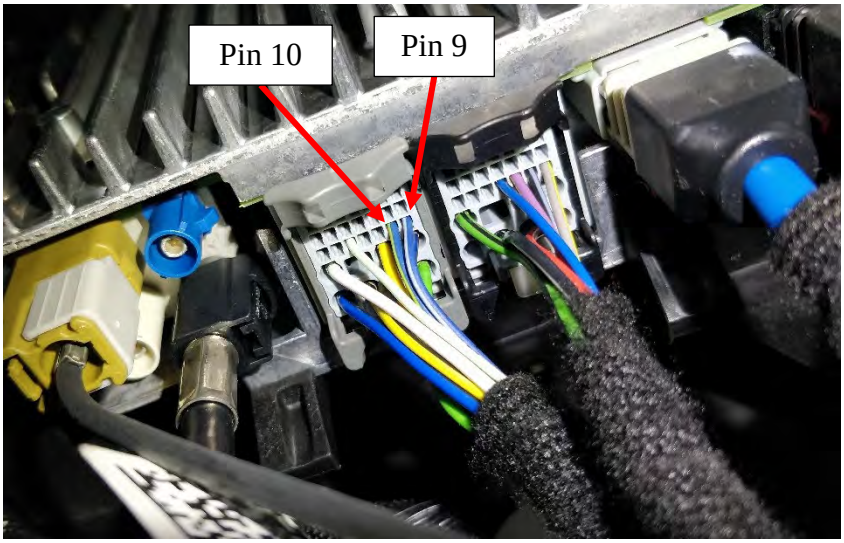


*NOTE: On some vehicles, the positions of the Black and Grey plugs may be reversed.

| Factory CAN Wire | Main Harness wire color |
|---|---|
| Blue w/ White Stripe (CAN-H) | White (High) |
| Blue w/ Yellow Stripe (CAN-L) | Yellow (Low) |

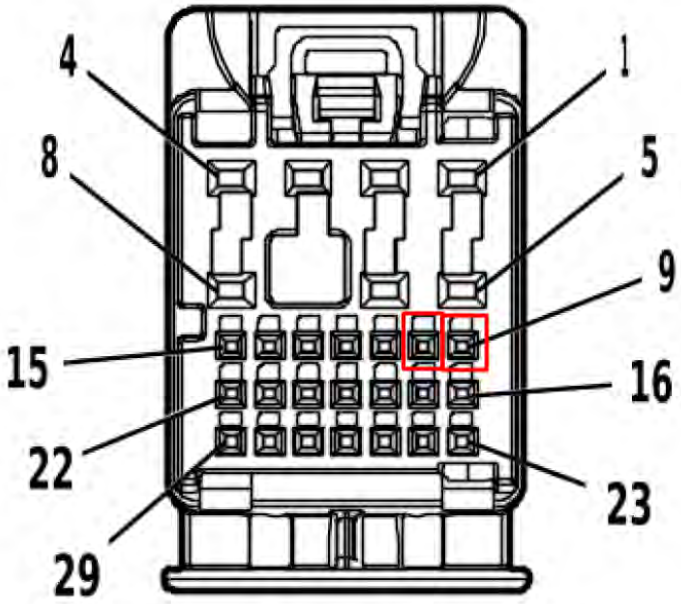


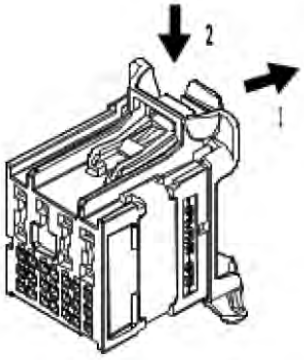


Pin 9 = High
Pin 10 = Low

After successfully connecting the wires, return the module back into its place, tighten the previously removed nuts, and check that it is secure on the bracket.

## 11

Plug in LED lights (Q) into LED Y-Harness (N) and attach them to the bottom of the rocker panel. Use provided 3M double sided adhesive tape on back of LED light (Q). Replace Fuse into Fuse Box.

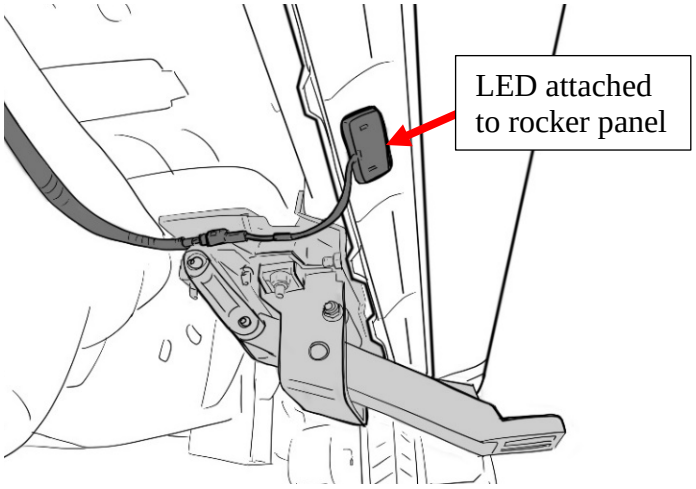


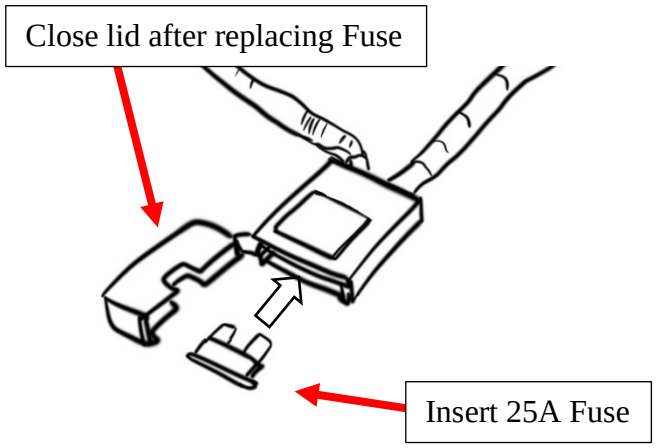


## 12

Check to make sure the harnesses on the Driver Side/Left Front Bracket Assembly (A) and Passenger Side Front Bracket Assembly (C) are connected to the main harness (M) via the LED-Y harnesses (N).

*NOTE: The linkage arms on the front bracket assemblies will not move unless both motors are connected.

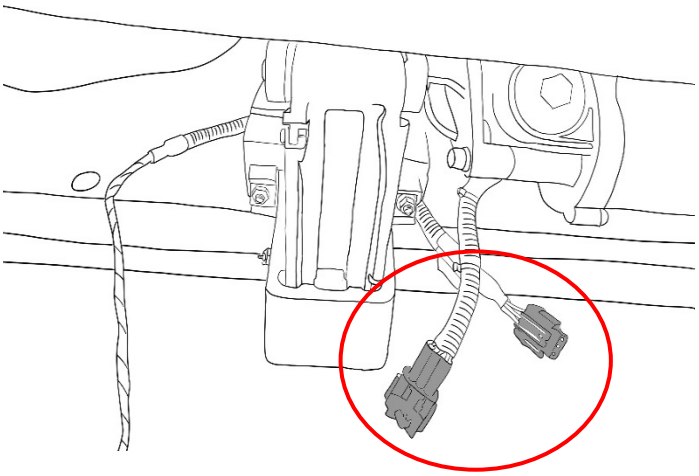

## 13

Seal the grommet with RTV Silicone Sealant.

Hide wires and reattach the kick panel with the carpet fully unfurled in its original position. Reattach the door sill panel and check to make sure there are no obstructions or potential snag points around the brake pedal area.

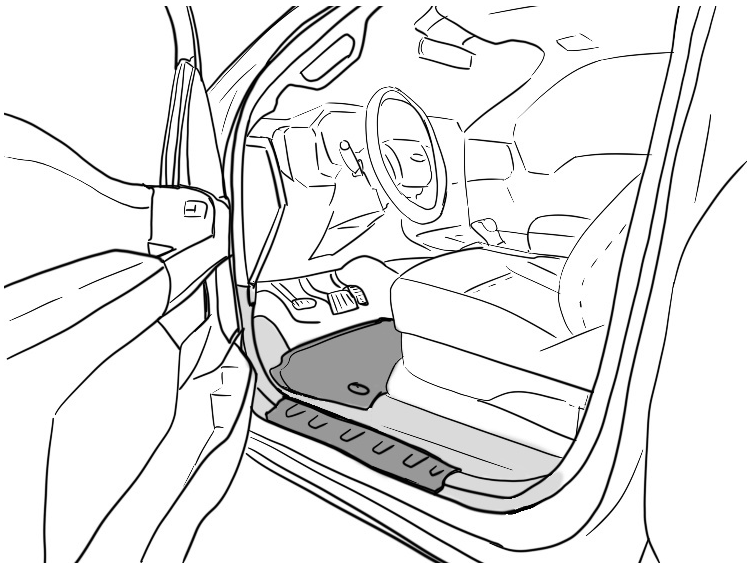

## 14

Prepare the power step boards. Locate the end of the boards and slide the M6 Carriage Bolts (E) into the channel on the underside of the board. Insert a total of 4 carriage bolts (E).

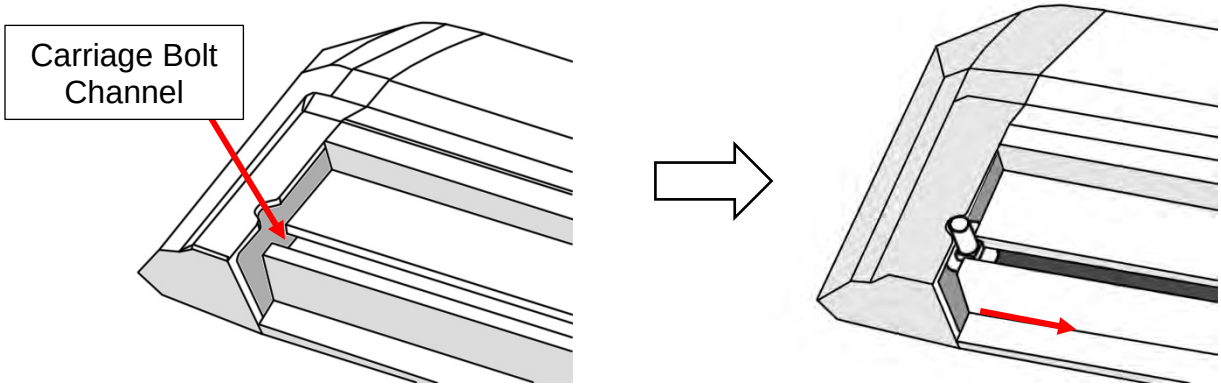


Use the notch in the board's end caps to feed the bolts into the channel.

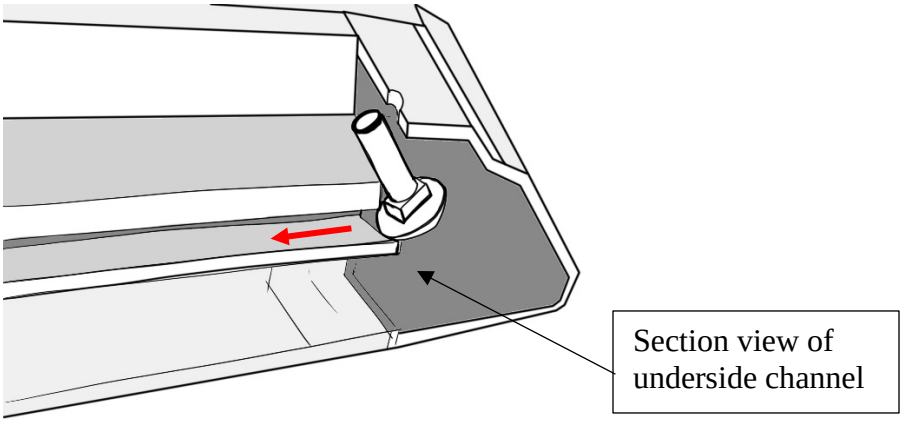


## 15

Perform a function check by closing the driver side front door and opening it again. The front bracket assembly (A) motor should activate the linkage arm and move it into the down or "deployed" position.

After deploying linkage arms, unplug main harness connector, while front door is open, to hold deployed position for running board installation.

Line up the carriage bolts (E), under the power step boards, with the slots on the linkage arms (A & B). Insert the 4 carriage bolts (E) into the slots on front and rear linkage arms. Adjust board to desired position. Moderately hand tighten the flange nuts (G) onto the carriage bolts.

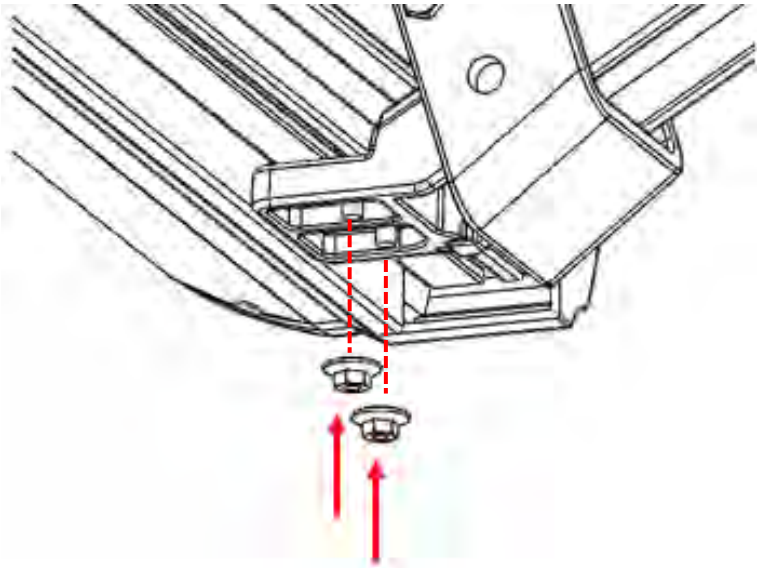

Once the board is adjusted, plug in main harness (M) connector to return power to the linkage arms. Open and close doors several times to deploy and retract the steps to settle the steps into their natural alignment. After cycling the step, tighten all hardware on the board and brackets.

Some further adjustment may be required for desired step position. Repeat for passenger side.

**16**

Perform system check and troubleshooting. If board is making irregular movements or noise, readjust the boards as follows:

a) With board deployed loosen 6mm flange nuts under board.

b) Leave the flange nuts slightly less than snug.

c) Open and close door several times for board to settle into position.

d) With the step in the deployed position, gradually tighten flange nuts while alternating between each. Do not over tighten.

If board is making abnormal noise or the motion is binding, repeat steps “a” through “d”.

Note: If the above method does not resolve the issue, the brackets mounting to the vehicle may not be aligned properly with the vehicle. In this case, remove the board and realign brackets before attempting steps “a” to “d” once again.

Reinstall any remaining trim panels if necessary. Check and make sure all hardware is fully tightened. Perform a final system check. Finish.

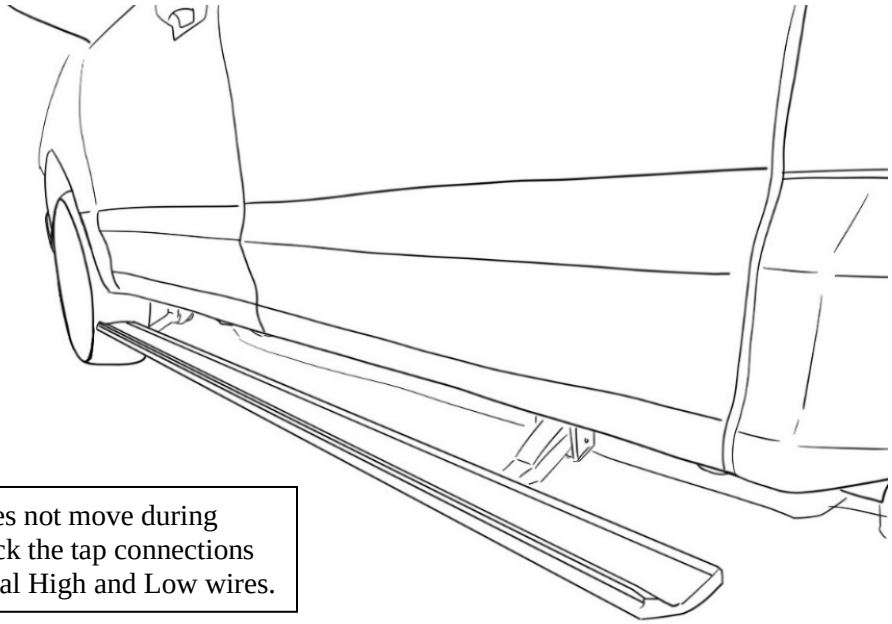

*NOTE: If board does not move during troubleshooting, check the tap connections or flip the CAN Signal High and Low wires.