INSTALLATION INSTRUCTIONS

MODULAR TEXTURED BLACK CLASSIC PRO ROLL BAR WITH BRAKE LIGHT FOR FORD RANGER 19-21 (COMPATIBLE WITH TONNEAU COVER BASE)

PART # RB08MT

IMPORTANT SAFETY DISCLAIMER:

Black Horse Off Road Roll Bars are not designed or intended to withstand a vehicle rollover. They are not rollover protection structures and are not engineered, tested, or certified to protect occupants in the event of a rollover. Installation of this product does not provide or imply any rollover protection.

Black Horse Off Road 39 St Mary's Place Freeport NY11520 Tel: 1(866) 926 2867 www.blackhorseoffroad.com

Before Installation

- Please read the instruction completely for easy installation, which will also help you to avoid scratches or other potential damages to your appealing car.
- The information shown here is for reference only and may differ from the product that you receive, however the goods are fitted in the same way.

Care and Cleaning

- Mild soap may be used also to clean the Product.
- Please periodically check and retighten all the hardware and clean the investment for a refresh look.

Parts list

NO.	QTY	PICTURE	NO.	QTY	PICTURE
①	1	 Front middle tube	②	1	 Rear middle tube
③	1	 Front side tube (L)	④	1	 Front side tube (R)
⑤	1	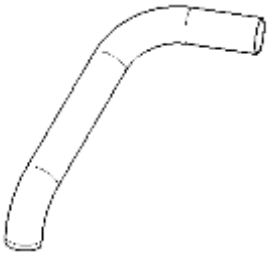 Rear side tube (L)	⑥	1	 Rear side tube (R)
⑦	1	 Middle decoration plate	⑧	1	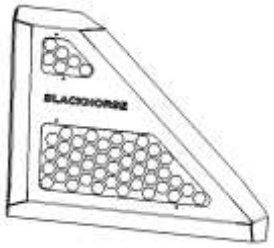 Decoration plate(L)

⑨	1	 Decoration plate(R)	⑩	1	 Allen wrench S=4
⑪	1	 Allen wrench S=5	⑫	1	 Allen wrench S=6
⑬	8	 Lock washer D6	⑭	2	 Lock washer D8
⑮	10	 Large flat washer D6	⑯	4	 Large flat washer D8
⑰	2	 Hex bolts M6_20	⑱	2	 Hex bolts M8_30
⑲	2	 Hex Nut M8	⑳	8	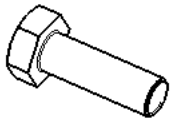 Hexagon bolt M6_20
㉑	4	 Bolt & Washer Assembly（M8_25）			
RANGER MOUNTING BASE：					
㉒	2	 Mounting base（L/R）	㉓	2	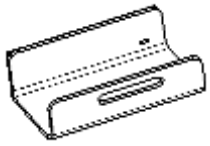 Front end cover（L/R）

㉔	2	 Rear end cover（L/R）	㉕	4	 Roll bar gum cover
㉖	1	 Black adhesive tape 1 （1600x35x5mm）	㉗	4	 Black adhesive tape 2 （250x35x5mm）
㉘	4	 Black adhesive tape 3 （250x35x3mm）	㉙	2	 Long plate nut
㉚	1	 Allen wrench S=4	㉛	1	 Allen wrench S=6
㉜	4	 Lock washer D10	㉝	4	 Large flat washer D10 （10x30x2.5mm）
㉞	4	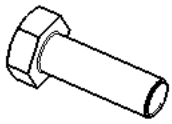 Hex head bots M10_35	㉟	4	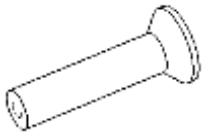 Hex bolts M10_45
㊱	4	 Bolt & Washer Assembly M6_20			

Installation Steps

Installation Diagram.

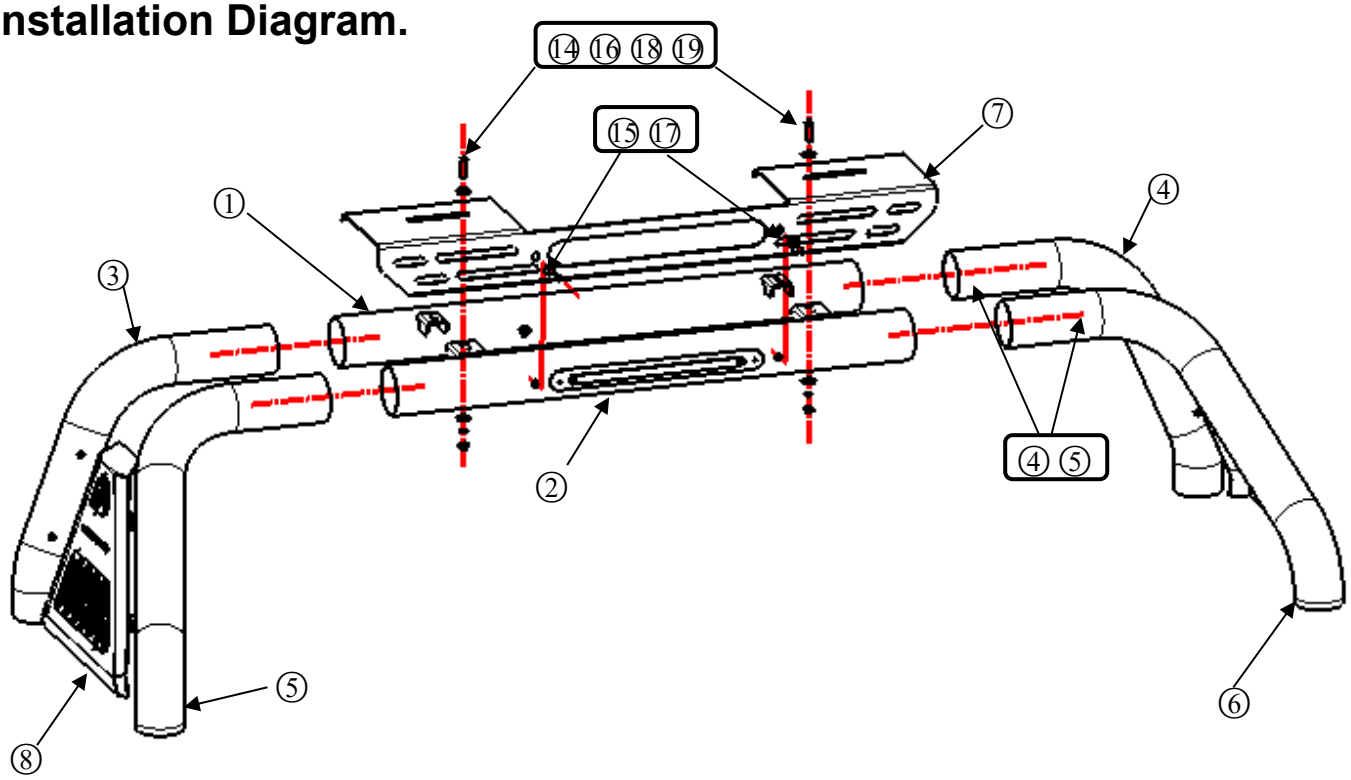

Step 1： Verify all parts are present.

Step 2： Put these parts in the corresponding positions according to the above installation diagram, assemble the tubes parts each other and ensure the roll bar can stand up. Install front middle tube ①, rear middle tube ② and middle decoration plate ⑦ with standard parts ⑮ ⑰ and ⑭ ⑯ ⑱ ⑲.(Do not lock tighten standard parts to provide sufficient adjustment space for subsequent installation)

Step 3： Assemble left decoration plate ⑧ and right decoration plate ⑨ with standard parts ⑬ ⑮ ⑳, the standard parts can be pre-tightened(During installation if you find the place is not enough, can adjust the gap size of the middle tube position in Step 2.

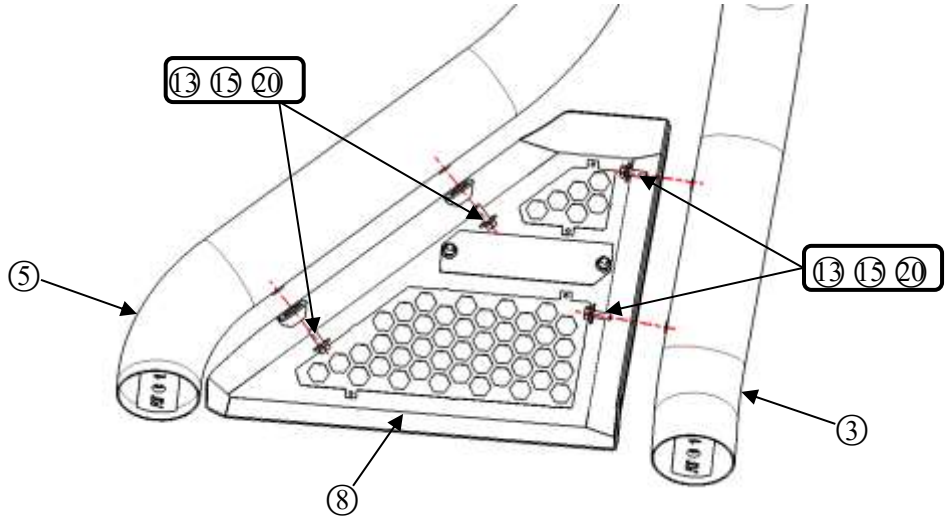

Step 4： After the preceding components are preinstalled, connect the side tube and middle tube with standard part ㉑.(To adjust tubes to appropriate position, lock tighten all accessories except standard part ㉑) PS: These adjustable holes can control the width of roll bar.

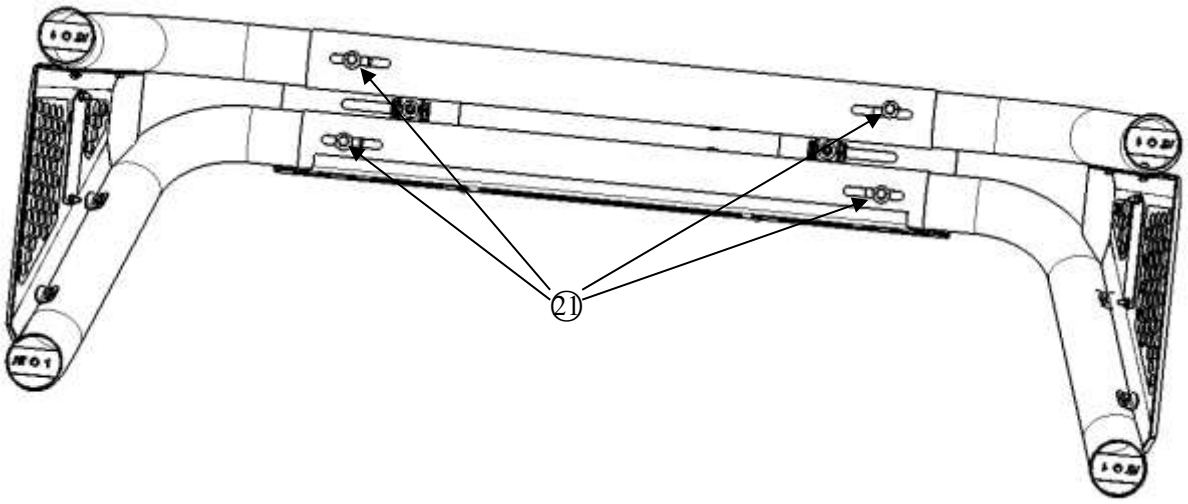

Step 5： Put mounting base(L/R) on both sides of the truck rail, to adjust the mounting base on suitable position, then mark down the installation holes for drilling(Ps: To make sure the drilling holes can go through with M10 standard parts). Install the mounting base on truck rail with Long plat nuts ㉙ and standard parts ㉜ ㉝ ㉞, as the following picture shown.

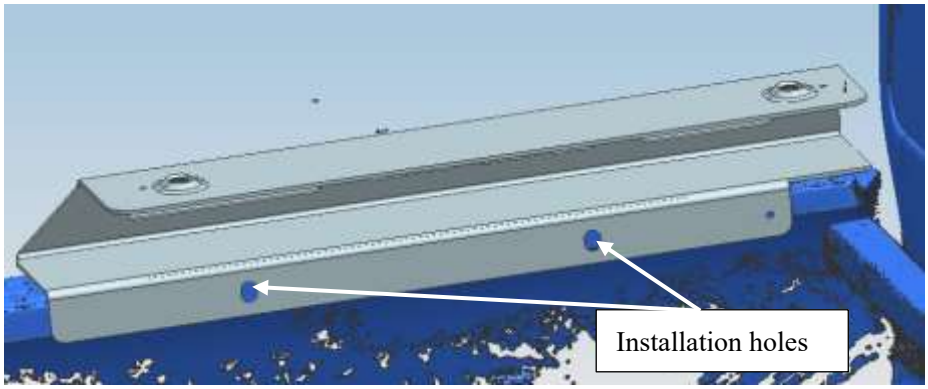

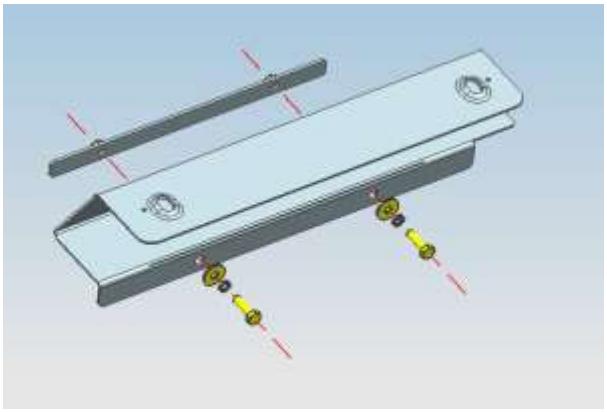

Step 6: Install the roll bar, mounting base and roll bar gum covers with standard part ㉟



Step 7：Install the front and rear end cover with standard part ㊱, lock tighten all standard parts.

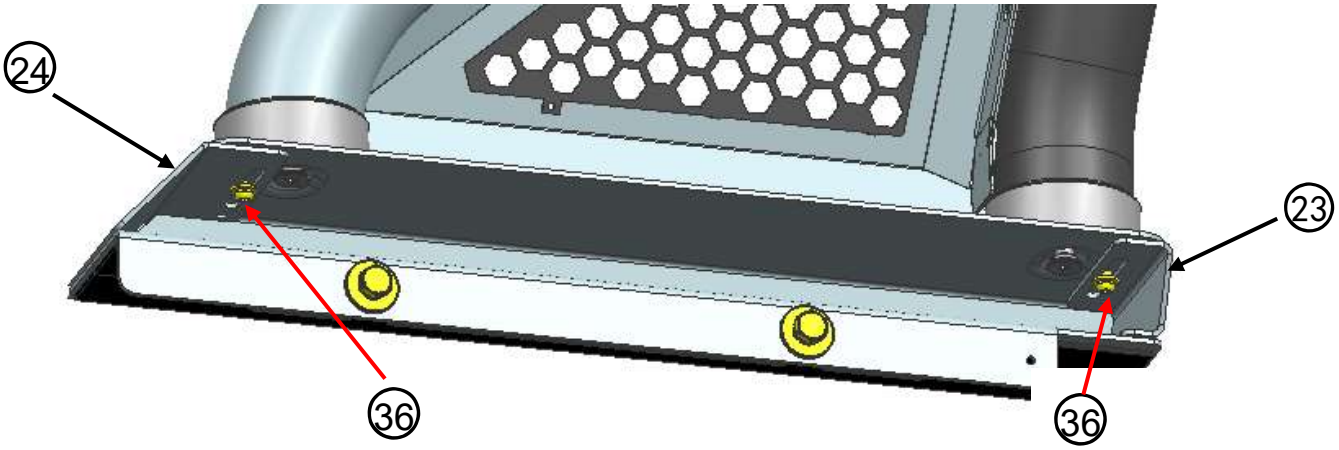

Installation complete



Note: When compatible with hard tri-fold tonneau cover, stick the black adhesive tape ㉖ ㉗ ㉘ on truck rail to cover gap between cover and truck rail.

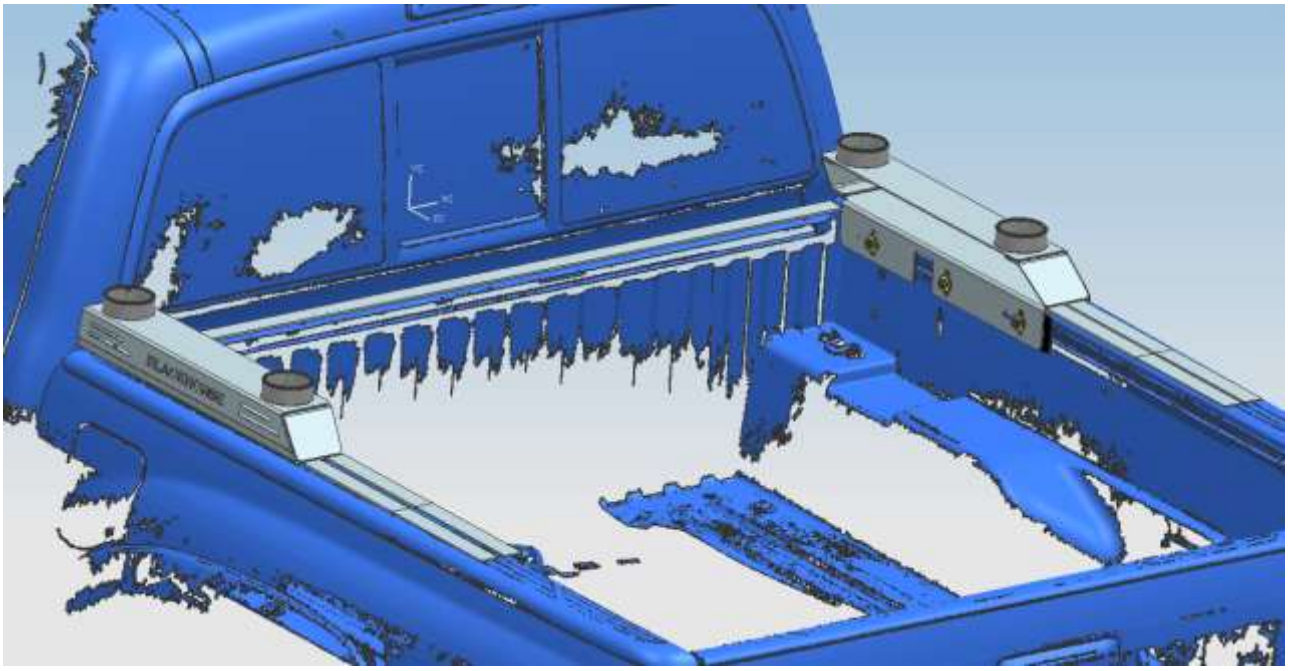

NOTE

Any damages and losses caused by improper installation and application, goes beyond our quality warranty.