INSTALLATION INSTRUCTIONS

BLACK ARMOUR UNIVERSAL ROLL BAR FOR 1/2 TON TRUCKS (2005-2020 NISSAN FRONTIER)

PART # ARB-NIFRB

IMPORTANT SAFETY DISCLAIMER:

Black Horse Off Road Roll Bars are not designed or intended to withstand a vehicle rollover. They are not rollover protection structures and are not engineered, tested, or certified to protect occupants in the event of a rollover. Installation of this product does not provide or imply any rollover protection.

Before Installation

- Please read the instruction completely for easy installation, which will also help you to avoid scratches or other potential damages to your appealing car.
- The figures here are for reference only and may have differences with the actual product you received, however they share the same assembly way.

Care and Cleaning

- Mild soap may be used also to clean the Product.
- Please periodically check and retighten all the hardware and clean the investment for a refresh look.

Parts list

NO.	QTY	NAME	NO.	QTY	NAME
①	1	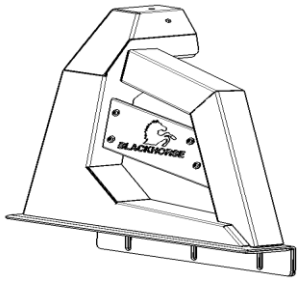 Left installation part	②	1	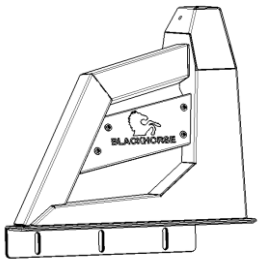 Right installation part
③	1	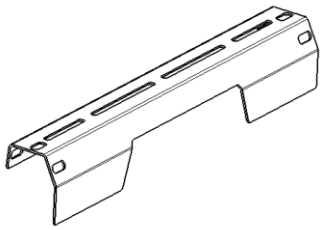 Connection plate	④	2	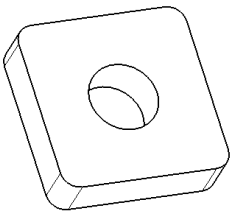 Block
⑤	12	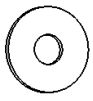 Flat washer D10	⑥	6	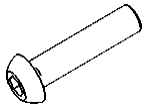 Button head allen bolts M10_25
⑦	6	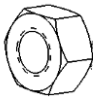 Hex nut M10	⑧	12	 Spring washer D10

⑨	6	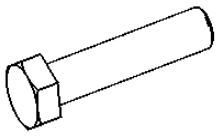 Hex nut M10_35	⑩	6	 Flat head nut M10_18
⑪	1	 Allen wrench S=6			

Installation Steps

Step1: Assemble ①Left installation part, ②Right installation part and ③Connection plate with standard parts. Lock all the standard parts after adjust the position.

Use standard parts ⑤⑥⑦⑧to connect ①②③

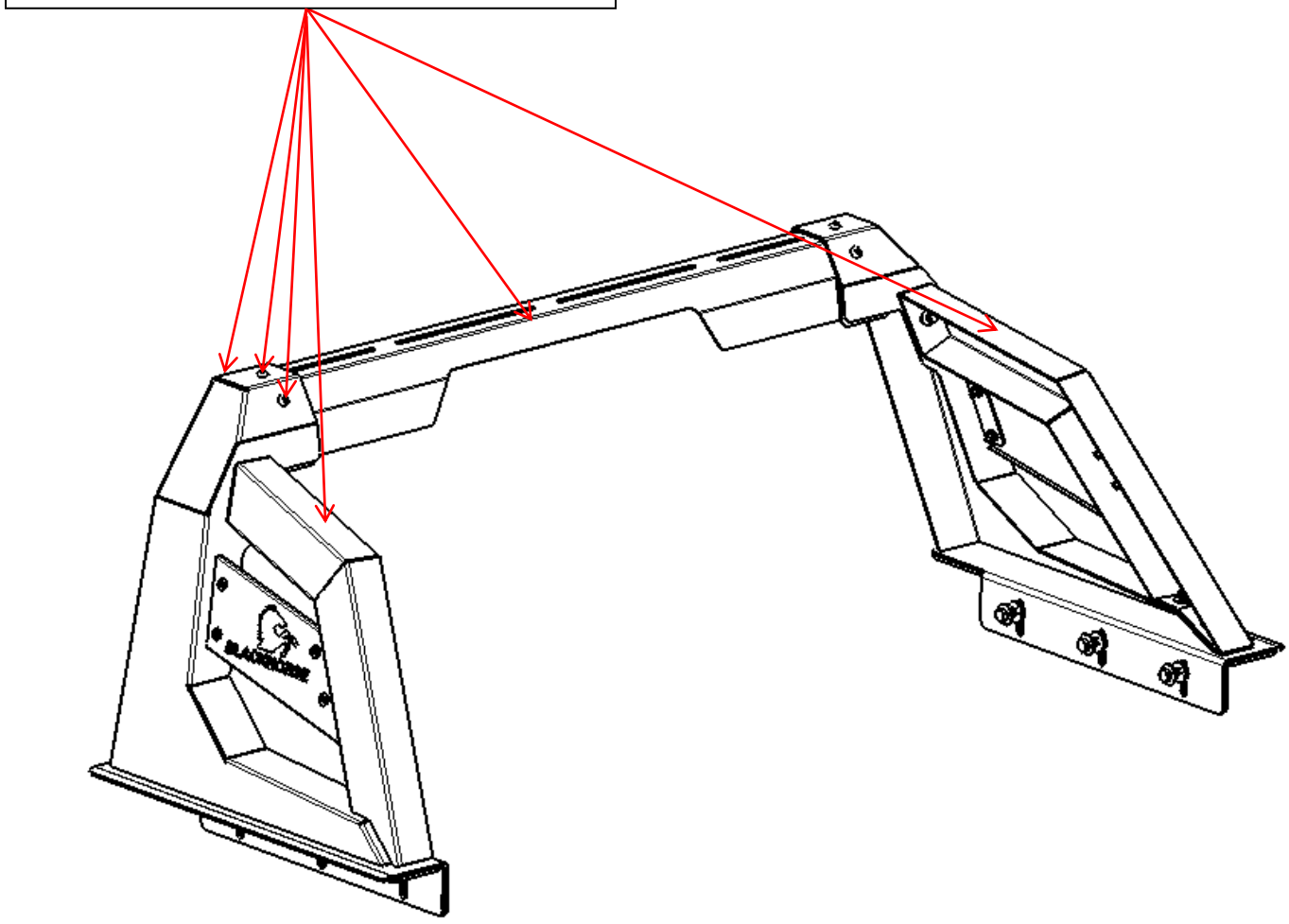

Step2: Place the roll bar on the truck in an appropriate location. And mark the hole with pen. (3 places in each part, total are 6 places.)

Remove the product and drill Φ13.8 size of holes, then place ⑩ Flat head nut M10_18 below the holes.

Then place roll bar on the truck and fixed with standard ⑤ Flat washer D10, ⑧ Spring washer D10, and ⑨ Hex nut M10_35.

④ Block is used for padding the product and the trunk when the car trunk width is big.

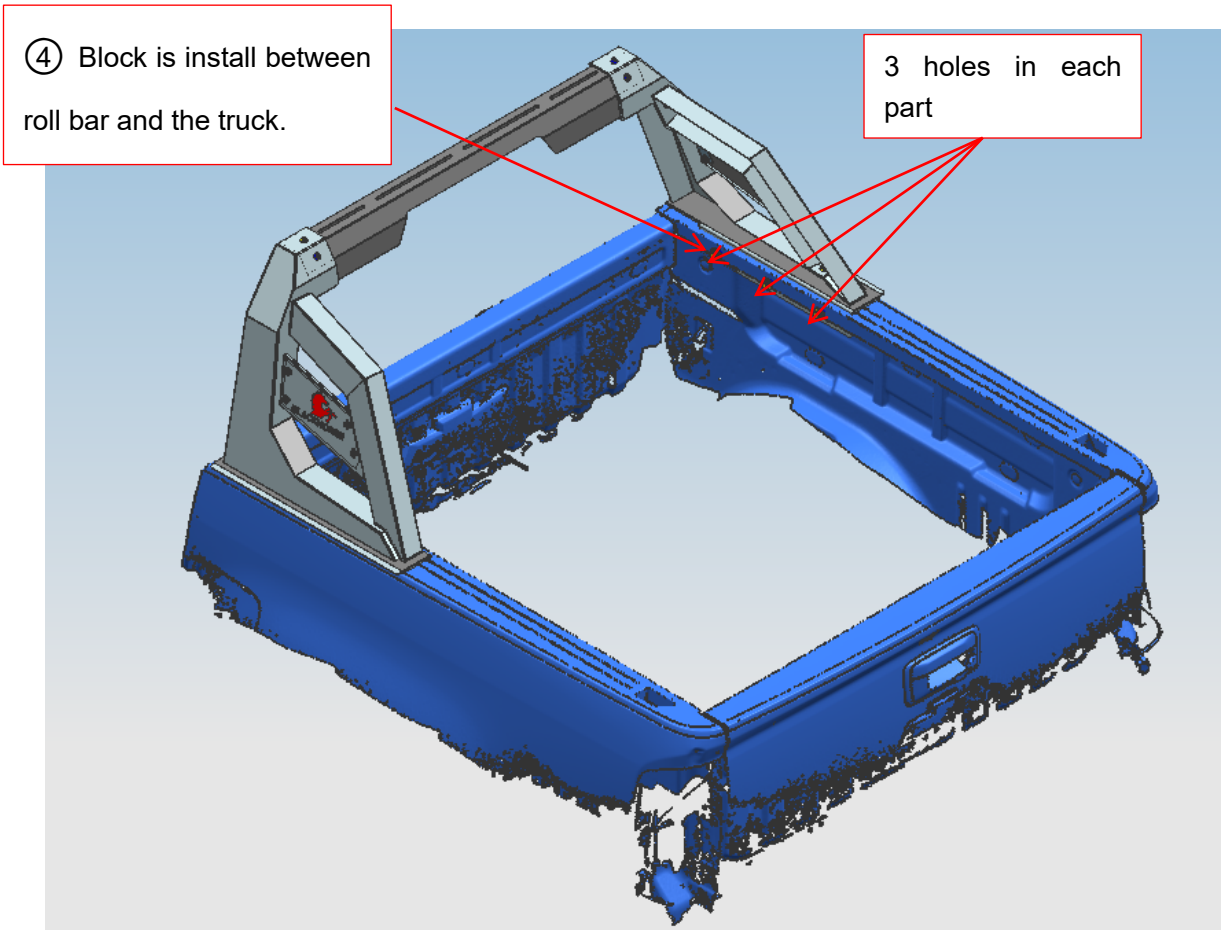

NOTE

Any damages and losses caused by improper installation and application, goes beyond our quality warranty.