

TEL：1-866-XANATOS

INSTALLATION INSTRUCTIONS

ARMOUR II ROLL BAR FOR 1/2 TON TRUCKS (GM SILVERADO 14+/FORD F150 15+/DODGE RAM 15+/TOYOTA TUNDRA 07-21)

PART # AR2-01B

PROTECTED BY ONE OR MORE PATENT

IMPORTANT SAFETY DISCLAIMER:

Black Horse Off Road Roll Bars are not designed or intended to withstand a vehicle rollover. They are not rollover protection structures and are not engineered, tested, or certified to protect occupants in the event of a rollover. Installation of this product does not provide or imply any rollover protection.

Before Installation

- Please read the instruction completely for easy installation, which will also help you to avoid scratches or other potential damages to your appealing car.
- The figures here are for reference only and may have differences with the actual product you received, however they share the same assembly way.

Care and Cleaning

- Mild soap may be used also to clean the Product.
- Please periodically check and retighten all the hardware and clean the investment for a refresh look.

Parts list

NO.	QTY	NAME	NO.	QTY	NAME
①	1	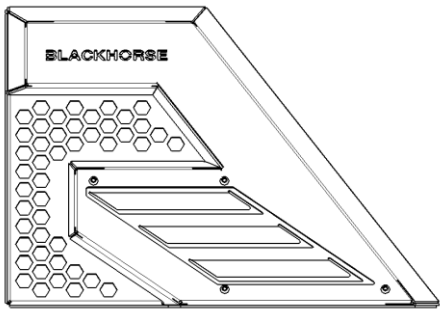 SIDE PLATE (L)	②	1	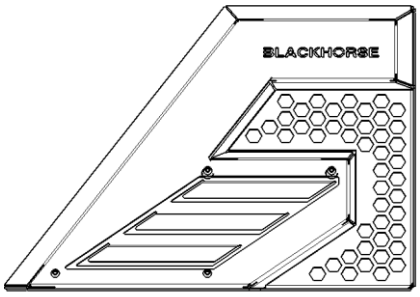 SIDE PLATE (R)
③	2	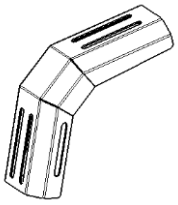 CONNECTING PLATE 1	④	1	 CENTRE BAR
⑤	1	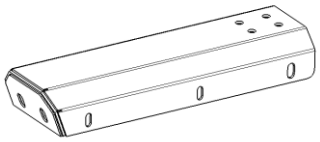 CONNECTING PLATE 3 (L)	⑥	1	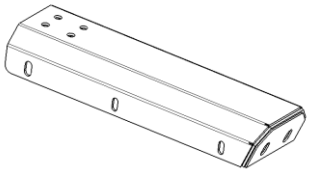 CONNECTING PLATE 3 (R)

⑦	1	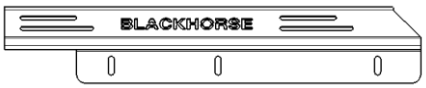 MOUNTING BASE (L)	⑧	1	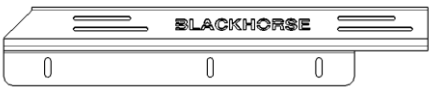 MOUNTING BASE (R)
⑨	26	 HEX FLANGE NUT M8	⑩	26	 FLAT WASHER D8 (8X24X2MM)
⑪	26	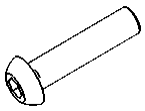 BUTTON HEAD BOLT M8_30	⑫	6	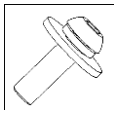 BUTTON HEAD BOLT ASSEMBLY M6_20
⑬	6	 HEX FLANGE NUT M6	⑭	12	 FLAT WASHER D10 (10X30X2.5MM)
⑮	6	 LOCK WASHER D10	⑯	6	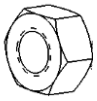 HEX NUT M10
⑰	6	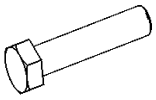 HEX BOLT (FULL THREAD) M10_35	⑱	6	 FLAT RIVETED NUT M10_18
⑲	1	 ALLEN WRENCH S=4	⑳	1	 ALLEN WRENCH S=5
㉑	5	 BLACK ADHESIVE 1	㉒	2	 BLACK ADHESIVE OF MOUNTING BASE 2
㉓	2	 BLACK ADHESIVE OF MOUNTING BASE 3 (L & R)			

Installation Steps

Step1: Assemble connecting plates1&3&centre plates and side plates with standard parts⑨⑩⑪/⑫⑬, as the following picture shown. Lock all standard parts once adjust the position to be proper.

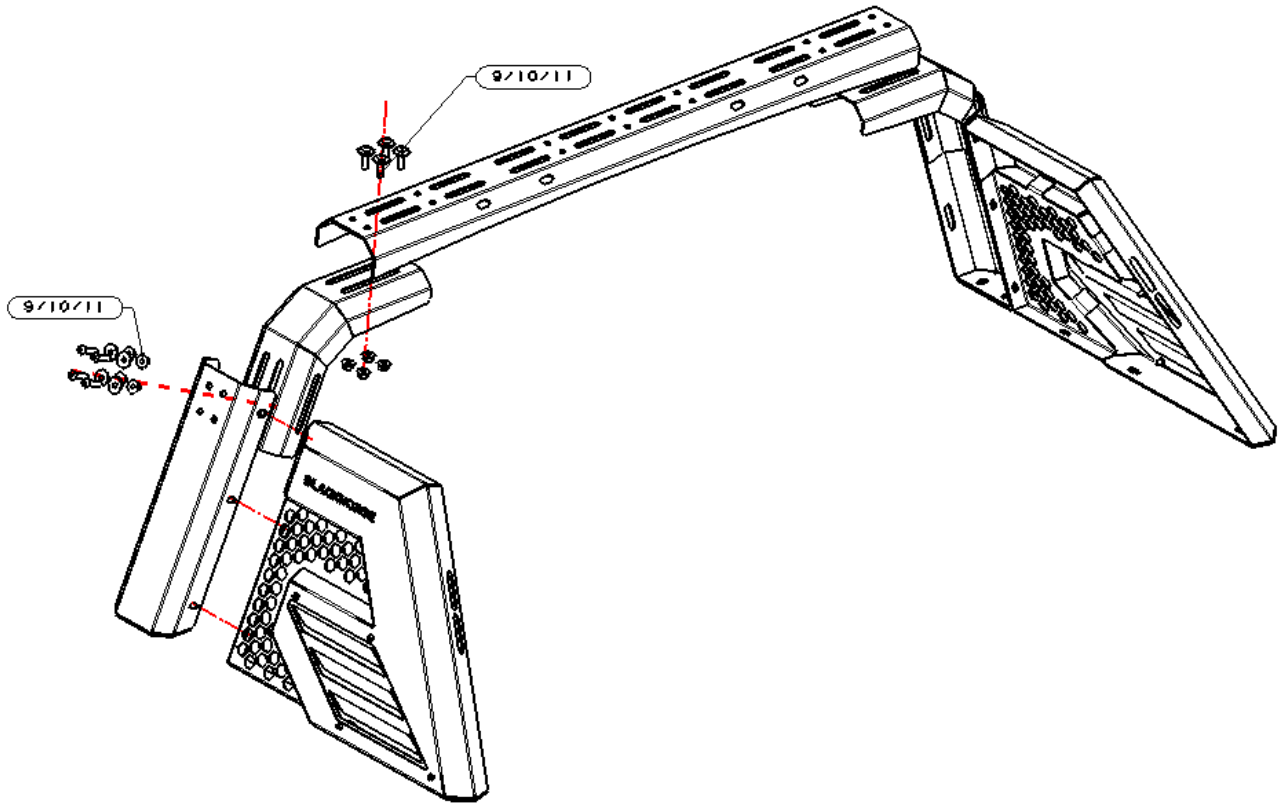

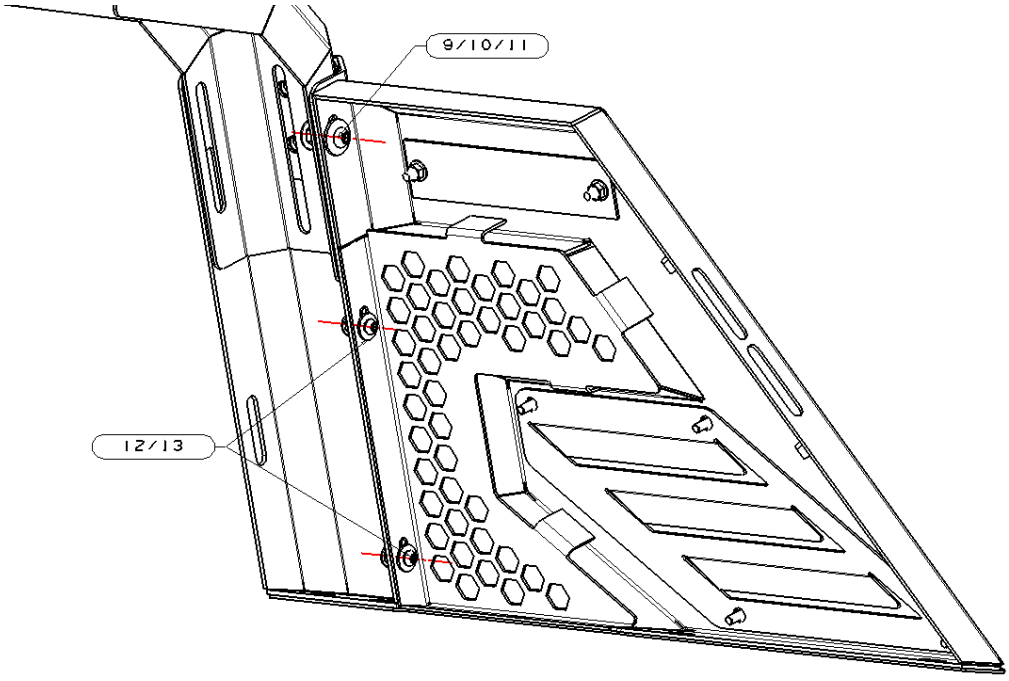

Step2: Stick the black adhesive⑳㉑㉒ on the mounting base (L&R)

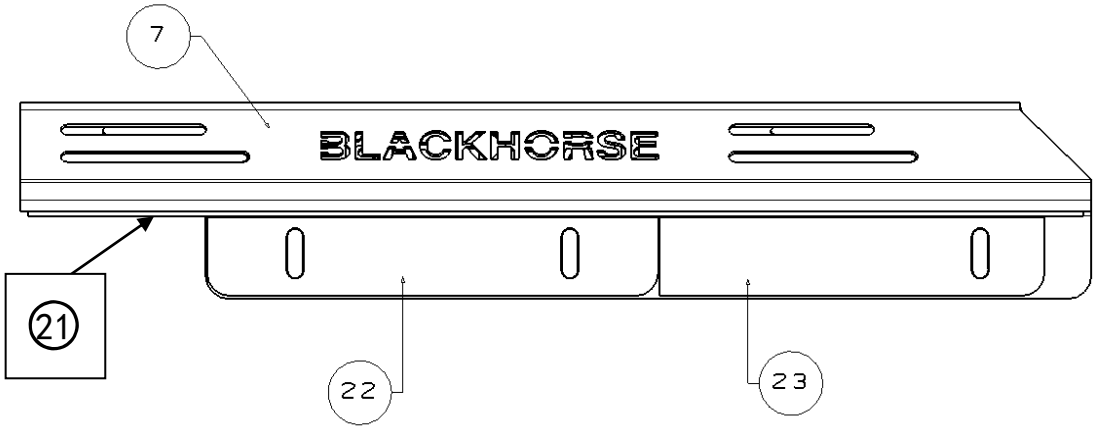

Step3: Connect the roll bar with mounting base by ha standard parts⑨⑩⑪/⑫⑬

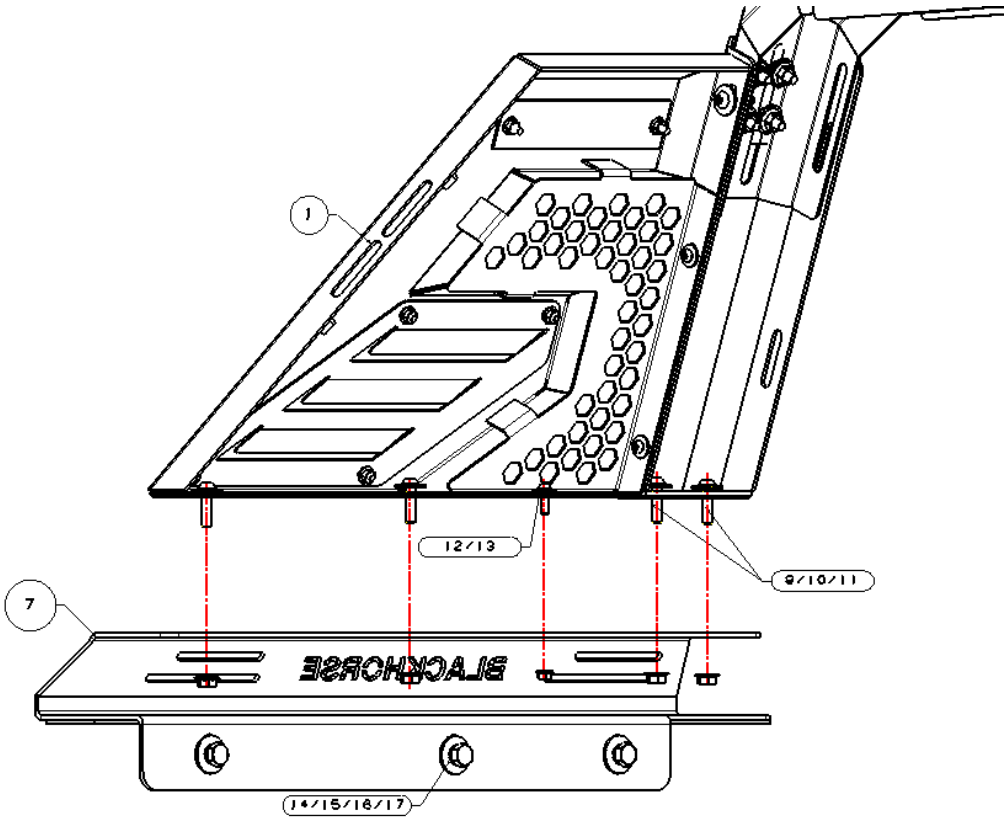

Step 4: Install roll bar on truck rail by hard standard parts⑭⑮⑯⑰

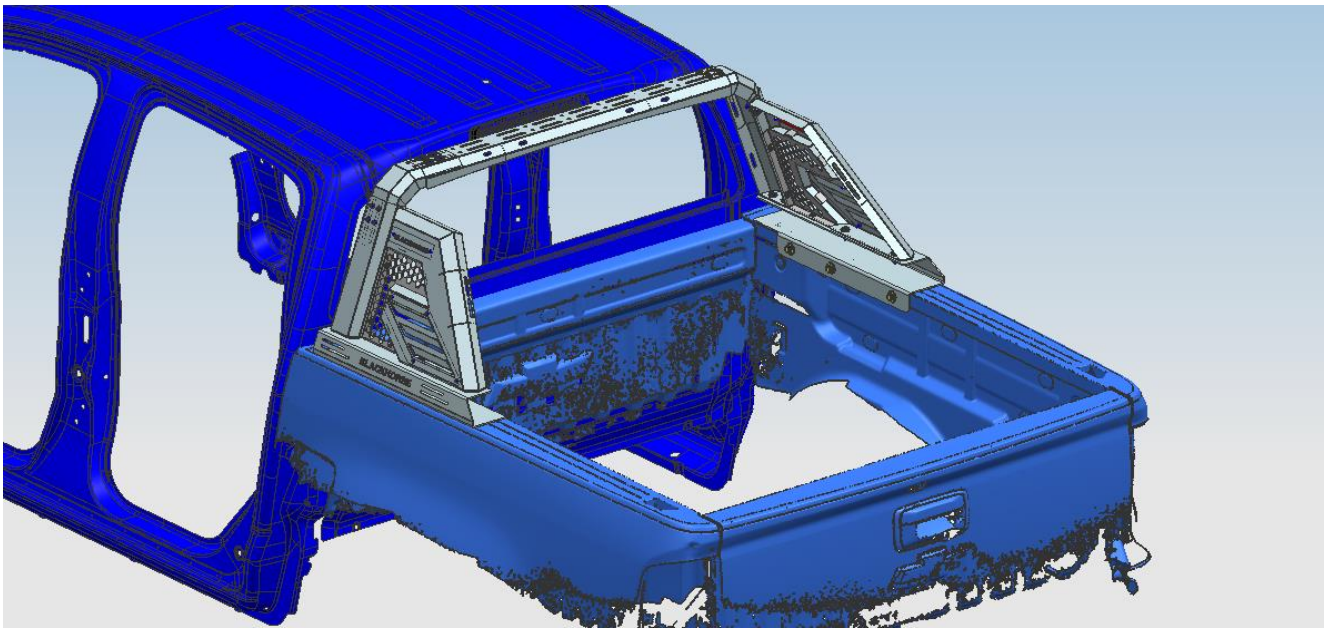

Installation completed and pick up all the tools.

NOTE

Any damages and losses caused by improper installation and application, goes beyond our quality warranty.